AMENDMENT OF SOLICITATION/MODIFICATION OF CONTRACT

1. CONTRACT ID CODE	PAGE	OF	PAGES
	1		3

2. AMENDMENT/MODIFICATION NO.	3. EFFECTIVE DATE	4. REQUISITION/PURCHASE REQ. NO.	5. PROJECT NO. *(If applicable)*
0004	20 DEC 2001		

6. ISSUED BY CODE

US ARMY ENGINEER DISTRICT, FORT WORTH
ATTN: CESWF-CT (RM 2A19)
PO BOX 17300
FORT WORTH, TX 76102-0300

7. ADMINISTERED BY *(If other than Item 6)* CODE

8. NAME AND ADDRESS OF CONTRACTOR *(No., street, county, State and ZIP Code)*

CODE FACILITY CODE

(X)

☒ 9A. AMENDMENT OF SOLICIATION NO. DACA63-02-B-0001

9B. DATED *(SEE ITEM 11)* 16 NOVEMBER 2001

☐ 10A. MODIFICATION OF CONTRACT/ORDER NO.

10B. DATED *(SEE ITEM 11)*

11. THIS ITEM ONLY APPLIES TO AMENDMENTS OF SOLICITATIONS

☒ The above numbered solicitation is amended as set forth in Item 14. The hour and date specified for receipt of Offers ☐ is extended, ☒ is not extended.

Offers must acknowledge receipt of this amendment prior to the hour and date specified in the solicitation or as amended, by one of the following methods:

(a)By completing items 8 and 15, and returning 1 copies of the amendment; (b) By acknowledging receipt of this amendment on each copy of the offer submitted; or (c) By separate letter or telegram which includes a reference to the solicitation and amendment numbers. FAILURE OF YOUR ACKNOWLEDGMENT TO BE RECEIVED AT THE PLACE DESIGNATED FOR THE RECEIPT OF OFFERS PRIOR TO THE HOUR AND DATE SPECIFIED MAY RESULT IN REJECTION OF YOUR OFFER. If by virtue of this amendment your desire to change an offer already submitted, such change may be made by telegram or letter, provided each telegram or letter makes reference to the solicitation and this amendment, and is received prior to the opening hour and date specified.

12. ACCOUNTING AND APPROPRIATION DATA *(If required)*

13. THIS ITEM ONLY APPLIES TO MODIFICATION OF CONTRACTS/ORDERS. IT MODIFIES THE CONTRACT/ORDER NO. AS DESCRIBED IN ITEM 14.

CHECK ONE	
	A. THIS CHANGE ORDER IS ISSUED PURSUANT TO: *(Specify authority)* THE CHANGES SET FORTH IN ITEM 14 ARE MADE IN THE CONTRACT ORDER NO. IN ITEM 10A.
	B. THE ABOVE NUMBERED CONTRACT/ORDER IS MODIFIED TO REFLECT THE ADMINISTRATIVE CHANGES *(such as changes in paying office, appropriation date, etc.)* SET FORTH IN ITEM 14, PURSUANT TO THE AUTHORITY OF FAR 43.103(b).
	C. THIS SUPPLEMENTAL AGREEMENT IS ENTERED INTO PURSUANT TO AUTHORITY OF:
	D. OTHER *(Specify type of modification and authority)*

E. IMPORTANT: Contractor ☐ is not, ☐ is required to sign this document and return _____ copies to the issuing office.

14. DESCRIPTION OF AMENDMENT/MODIFICATION (*Organized by UCF section headings, including solicitation/contract subject matter where feasible.)*

The Solicitation for ENLISTED BARRACKS COMPLEX II, FORT HOOD, TEXAS, is amended as follows:

See Continuation Sheet.

NOTE: The Bid Opening date and time remain "17 January 2002, at 2 p.m., local time," as previously announced.

Except as provided herein, all terms and conditions of the document referenced in Item 9A or 10A, as heretofore changed, remains unchanged and in full force and effect.

15A. NAME AND TITLE OF SIGNER *(Type or print)*		16A. NAME AND TITLE OF CONTRACTING OFFICER *(Type or print)*	
15B. CONTRACTOR/OFFEROR *(Signature of person authorized to sign)*	15C. DATE SIGNED	16B. UNITED STATES OF AMERICA *(Signature of Contracting Officer)*	16C. DATE SIGNED

Item 14. Continued.

CHANGES TO THE SPECIFICATIONS

1. Deleted Sections – Delete the following specification sections in their entirety:

SECTION 13080	SEISMIC PROTECTION FOR MISCELLANEOUS EQUIPMENT (TO MEET ANTI-TERRORISM/FORCE PROTECTION CRITERIA)
SECTION 13935	DRY PIPE SPRINKLER SYSTEM, FIRE PROTECTION
SECTION 15070	SEISMIC PROTECTION FOR MECHANICAL EQUIPMENT (TO MEET ANTI-TERRORISM/FORCE PROTECTION CRITERIA)
SECTION 16070	SEISMIC PROTECTION FOR ELECTRICAL EQUIPMENT (TO MEET ANTI-TERRORISM/FORCE PROTECTION CRITERIA)

2. New Sections - Add the following accompanying new sections, bearing the notation "ACCOMPANYING AMENDMENT NO. 0004 TO SOLICITATION NO. DACA63-02-B-0001:"

SECTION 11020A	ARMS ROOM VAULT DOOR
SECTION 11026	ANTI-TERRORISM/FORCE PROTECTION MEASURES

3. Replacement Sections - Replace the following sections with the accompanying new sections of the same number and title, bearing the notation "ACCOMPANYING AMENDMENT NO. 0004 TO SOLICITATION NO. DACA63-02-B-0001:"

SECTION 04200	MASONRY
SECTION 06410	CUSTOM CASEWORK
SECTION 08700	BUILDERS' HARDWARE
SECTION 08810	GLASS AND GLAZING
SECTION 09250	GYPSUM WALLBOARD (Includes attachment at end of section added by this amendment)
SECTION 09510	ACOUSTICAL CEILINGS (Includes attachment at end of section added by this amendment)
SECTION 09900	PAINTING, GENERAL
SECTION 09915	COLOR SCHEDULE
SECTION 10101	MISCELLANEOUS ITEMS
SECTION 10260	WALL AND CORNER PROTECTION
SECTION 10550	POSTAL SPECIALTIES
SECTION 11400	FOOD SERVICE EQUIPMENT
SECTION 13208	WIRE-WOUND CIRCULAR PRESTRESSED-CONCRETE INSULATED CHILLED WATER STORAGE TANK
SECTION 15569	WATER AND STEAM HEATING; OIL, GAS OR BOTH; UP TO 20 MBTUH
SECTION 15650	CENTRAL REFRIGERATED AIR-CONDITIONING SYSTEM

CHANGES TO THE DRAWINGS

4. New Issue Drawings.- The new drawings listed below which accompany this amendment, bearing the notation "AM #0004" shall be added to and become a part of the contract documents:

ma081.cal MA08.1 Anti-Terrorism/Force Protection Support Detail
mb091.cal MB09.1 Anti-Terrorism/Force Protection Support Detail
mc071.cal MC07.1 Anti-Terrorism/Force Protection Support Detail
fp01c.cal FP01C Automatic Sprinkler Plan
fp02c.cal FP02C Fire Protection Legend And Schematics
fp03c.cal FP03C Fire Protection Schematics
md091.cal MD09.1 Anti-Terrorism/Force Protection Support Detail

5. Replacement Drawings.- Replace the drawings listed below with the attached new drawings of the same number, bearing the notation "AM #0004":

c37.cal C37 UTILITY PLAN II
c39.cal C39 UTILITY PLAN IV
c60.cal C60 UTILITY DETAILS
l29.cal L29 LANDSCAPE DETAILS III
g04.cal G04 VOLUME TWO MAIN INDEX
aa13.cal AA13 WALL TYPES
aa14.cal AA14 ENLARGED PLANS & ELEVATIONS
aa15.cal AA15 DOOR & WINDOW DETAILS I
aa17.cal AA17 ENLARGED PLANS & DETAILS
aa20.cal AA20 MISCELLANEOUS DETAILS II
ia05.cal IA05 ROOM FINISH SCHEDULE
ma01.cal MA01 Mechanical Legend and Schedules
ab06.cal AB06 FIRST FLOOR PLAN - ZONE B2
ab07.cal AB07 SECOND FLOOR PLAN - ZONE B2
ab08.cal AB08 THIRD FLOOR PLAN - ZONE B2
ab25.cal AB25 TYPICAL ROOM MODULE (BARRACKS)
ab28.cal AB28 MILLWORK DETAILS
ib10.cal IB10 FIRST FLOOR SIGNAGE PLACEMENT PLAN - ZONE B1
ib11.cal IB11 SECOND SIGNAGE PLACEMENT PLAN - ZONE B2
ib12.cal IB12 THIRD FLOOR SIGNAGE PLACEMENT PLAN - ZONE B2
ib13.cal IB13 SIGNAGE SCHEDULE
ib15.cal IB15 ROOM FINISH SCHEDULE
sb17.cal SB17 PICNIC SHELTER
g06.cal G06 VOLUME THREE MAIN INDEX
mb01.cal MB01 Mechanical Legend and Schedules
ac15.cal AC15 ENLARGED PLANS I
ac18.cal AC18 MISCELLANEOUS DETAILS I
ac20.cal AC20 WIRE MESH PARTITION DETAILS
ac22.cal AC22 ROOM FINISH SCHEDULE
ic03.cal IC03 SIGNAGE PLACEMENT PLAN
ic04.cal IC04 SIGNAGE PLACEMENT PLAN
ic05.cal IC05 SIGNAGE SCHEDULE
sc11.cal SC11 PARTIAL ROOF PLAN -2
mc01.cal MC01 Mechanical Legend and Schedules
mc12.cal MC12 Plumbing Floor Plan - Overall Buildings
mc13.cal MC13 Plumbing Floor Plan - Typical Building
mc14.cal MC14 Enlarged Plumbing Floor Plans
mc16.cal MC16 Plumbing Details
ec08.cal EC08 COMPANY OPERATIONS BLDG FIRE ALARM RISER DIAGRAM
ad08.cal AD08 BUILDING ELEVATIONS II
id04.cal ID04 ROOM FINISH SCHEDULE
qd01.cal QD01 EQUIPMENT PLAN
qd05.cal QD05 EQUIPMENT DETAILS IV
qd06.cal QD06 EQUIPMENT SCHEDULE I
qd07.cal QD07 EQUIPMENT SCHEDULE II
qd08.cal QD08 EQUIPMENT SCHEDULE III
g08.cal G08 VOLUME THREE MAIN INDEX
md01.cal MD01 Mechanical Legend And Schedules
ed03.cal ED03 DINING HALL POWER PLAN
ed17.cal ED17 DINING HALL PANEL SCHEDULES 1
me05.cal ME05 Chilled Water Storage Tank - Bid Option No. 3

END OF AMENDMENT

SECTION 04200

MASONRY
07/92
Amendment 0004

PART 1 GENERAL

1.1 REFERENCES

The publications listed below form a part of this specification to the extent referenced. The publications are referred to in the text by basic designation only.

ACI INTERNATIONAL (ACI)

ACI SP-66	(1994) ACI Detailing Manual

AMERICAN SOCIETY FOR TESTING AND MATERIALS (ASTM)

ASTM A 82	(1997a) Steel Wire, Plain, for Concrete Reinforcement
ASTM A 153/A 153M	(1998) Zinc Coating (Hot-Dip) on Iron and Steel Hardware
ASTM A 615/A 615M	(1996a) Deformed and Plain Billet-Steel Bars for Concrete Reinforcement
ASTM C 55	(1997a) Concrete Brick
ASTM C 62	(1997a) Building Brick (Solid Masonry Units Made from Clay or Shale)
ASTM C 67	(1998a) Sampling and Testing Brick and Structural Clay Tile
ASTM C 90	(1998) Loadbearing Concrete Masonry Units
ASTM C 91	(1998) Masonry Cement
ASTM C 126	(1996) Ceramic Glazed Structural Clay Facing Tile, Facing Brick, and Solid Masonry Units
ASTM C 129	(1997) Nonloadbearing Concrete Masonry Units
ASTM C 140	(1998b) Sampling and Testing Concrete Masonry Units
ASTM C 216	(1998) Facing Brick (Solid Masonry Units Made from Clay or Shale)
ASTM C 270	(1997ae1) Mortar for Unit Masonry

ASTM C 476	(1998) Grout for Masonry
ASTM C 494	(1998) Chemical Admixtures for Concrete
ASTM C 578	(1995) Rigid, Cellular Polystyrene Thermal Insulation
ASTM C 641	(1982; R 1991) Staining Materials in Lightweight Concrete Aggregates
ASTM C 780	(1996) Preconstruction and Construction Evaluation of Mortars for Plain and Reinforced Unit Masonry
ASTM C 1019	(1989a; R 1998) Sampling and Testing Grout
ASTM C 1072	(1998) Measurement of Masonry Flexural Bond Strength
ASTM D 2000	(1998c) Rubber Products in Automotive Applications
ASTM D 2240	(1997el) Rubber Property - Durometer Hardness
ASTM D 2287	(1996) Nonrigid Vinyl Chloride Polymer and Copolymer Molding and Extrusion Compounds
ASTM E 119	(1998) Fire Tests of Building Construction and Materials
ASTM E 447	(1992b) Compressive Strength of Masonry Prisms
ASTM E 514-74	(1974) Integral Liquid Polymeric Admixture

1.2 RELATED SECTIONS

See the following section for additional requirements:

04201 HIGH PERFORMANCE CONCRETE MASONRY.

1.3 SUBMITTALS

Government approval is required for submittals with a "G" designation; submittals not having a "G" designation are for information only. When used, a designation following the "G" designation identifies the office that will review the submittal for the Government. The following shall be submitted in accordance with Section 01330 SUBMITTAL PROCEDURES:

SD-02 Shop Drawings

Masonry Work; G

Drawings including plans, elevations, and details of wall reinforcement; details of reinforcing bars at corners and wall intersections; offsets; tops, bottoms, and ends of walls; control and expansion joints; and wall openings. Bar splice locations shall be shown. Drawings shall be provided showing the location and layout of glass block units. If the Contractor opts to furnish inch-pound CMU products, drawings showing elevation of walls exposed to view and indicating the location of all cut CMU products shall be submitted for approval. Bent bars shall be identified on a bending diagram and shall be referenced and located on the drawings. Wall dimensions, bar clearances, and wall openings greater than one masonry unit in area shall be shown. No approval will be given to the shop drawings until the Contractor certifies that all openings, including those for mechanical and electrical service, are shown. If, during construction, additional masonry openings are required, the approved shop drawings shall be resubmitted with the additional openings shown along with the proposed changes. Location of these additional openings shall be clearly highlighted. The minimum scale for wall elevations shall be 1 to 50. Reinforcement bending details shall conform to the requirements of ACI SP-66.

SD-03 Product Data

Clay or Shale Brick; G,
Concrete Brick; G,

Glass Block Units and Accessories; G,

Manufacturer's descriptive data.

Cold Weather Installation; G,

Cold weather construction procedures.

SD-04 Samples

Concrete Masonry Units (CMU); G,
Glazed Concrete Masonry Units; G,

Glass Block Units and Accessories; G,
Clay or Shale Brick; G,

Color samples of three stretcher units and one unit for each type of special shape. Units shall show the full range of color and texture.

Anchors, Ties, and Bar Positioners; G,

Two of each type used.

Expansion-Joint Materials; G,

One piece of each type used.

Joint Reinforcement; G,

One piece of each type used, including corner and wall intersection pieces, showing at least two cross wires.

Insulation; G,

One piece of board type insulation, not less than 400 mm by 600 mm in size, containing the label indicating the rated permeance and R-values.

Portable Panel; G,

One panel of clay or shale brick, 600 mm by 600 mm, containing approximately 24 brick facings to establish range of color and texture.

SD-06 Test Reports

Efflorescence Test; G,
Field Testing of Mortar; G,
Field Testing of Grout; G,

Masonry Cement; G,
Fire-rated CMU; G,

Test reports from an approved independent laboratory. Test reports on a previously tested material shall be certified as the same as that proposed for use in this project.

Special Inspection; G,

Copies of masonry inspector reports.

SD-07 Certificates

Clay or Shale Brick;
Concrete Brick;
Concrete Masonry Units (CMU);

Control Joint Keys;
Anchors, Ties, and Bar Positioners;
Expansion-Joint Materials;
Joint Reinforcement;
Reinforcing Steel Bars and Rods;
Masonry Cement;
Mortar Coloring;
Insulation;
Precast Concrete Items;
Mortar Admixtures;
Grout Admixtures;
Glass Block Units and Accessories;

Certificates of compliance stating that the materials meet the specified requirements.

Insulation;

Certificate attesting that the polyurethane or polyisocyanurate insulation furnished for the project contains recovered material, and showing an estimated percent of such recovered material.

1.4 SAMPLE MASONRY PANELS

After material samples are approved and prior to starting masonry work, sample masonry panels shall be constructed for each type and color of masonry required. At least 48 hours prior to constructing the sample panel or panels, the Contractor shall submit written notification to the Contracting Officer's Representative. Sample panels shall not be built in, or as part of the structure, but shall be located where directed.

1.4.1 Configuration

Panels shall be L-shaped or otherwise configured to represent all of the wall elements. Panels shall be of the size necessary to demonstrate the acceptable level of workmanship for each type of masonry represented on the project. The minimum size of a straight panel or a leg of an L-shaped panel shall be 2.4 m LONG BY 2.4 m HIGH BY 1.6 m WIDE.

1.4.2 Composition

Panels shall show full color range, texture, and bond pattern of the masonry work. Panels shall also be funished with (water repellant) Sealer as specified herein. The Contractor's method for mortar joint tooling; grouting of reinforced vertical cores, collar joints, bond beams, and lintels; positioning, securing, and lapping of reinforcing steel; positioning and lapping of joint reinforcement (including prefabricated corners); and cleaning of masonry work and application of sealer shall be demonstrated during the construction of the panels. Installation or application procedures for anchors, wall ties, glass block units, CMU control joints, brick expansion joints, insulation, flashing, brick soldier, row lock courses and weep holes shall be shown in the sample panels. The panels shall contain a masonry bonded corner that includes a bond beam corner. Panels shall show parging and installation of electrical boxes and conduit. Panels that represent reinforced masonry shall contain a 600 mm by 600 mm opening placed at least 600 mm above the panel base and 600 mm away from all free edges, corners, and control joints. Required reinforcing shall be provided around this opening as well as at wall corners and control joints.

1.4.3 Construction Method

Where anchored veneer walls are required, the Contractor shall demonstrate and receive approval for the method of construction; i.e., either bring up the two wythes together or separately, with the insulation and appropriate ties placed within the specified tolerances across the cavity. Temporary provisions shall be demonstrated to preclude mortar or grout droppings in the cavity and to provide a clear open air space of the dimensions shown on the drawings. Where masonry is to be grouted, the Contractor shall demonstrate and receive approval on the method that will be used to bring up the masonry wythes; support the reinforcing bars; and grout cells, bond beams, lintels, and collar joints using the requirements specified herein. If sealer is specified to be applied to the masonry units, sealer shall be applied to the sample panels. Panels shall be built on a properly designed concrete foundation.

1.4.4 Usage

The completed panels shall be used as the standard of workmanship for the type of masonry represented. Masonry work shall not commence until the sample panel for that type of masonry construction has been completed and approved. Panels shall be protected from the weather and construction operations until the masonry work has been completed and approved. After completion of the work, the sample panels, including all foundation concrete, shall become the property of the Contractor and shall be removed from the construction site.

1.5 DELIVERY, HANDLING, AND STORAGE

Materials shall be delivered, handled, stored, and protected to avoid chipping, breakage, and contact with soil or contaminating material.

1.5.1 High Performance (Refer to specification section 04201-High performance concrete masonry)Masonry Units

High Performance Concrete masonry units shall be covered or protected from inclement weather and shall conform to the moisture content as specified in ASTM C 90when delivered to the jobsite. In addition, glass block units shall be stored with their finish surfaces covered. Prefabricated lintels shall be marked on top sides to show either the lintel schedule number or the number and size of top and bottom bars.

1.5.2 Reinforcement, Anchors, and Ties

Steel reinforcing bars, coated anchors, ties, and joint reinforcement shall be stored above the ground. Steel reinforcing bars and uncoated ties shall be free of loose mill scale and rust.

1.5.3 Cementitious Materials, Sand and Aggregates

Cementitious and other packaged materials shall be delivered in unopened containers, plainly marked and labeled with manufacturers' names and brands. Cementitious material shall be stored in dry, weathertight enclosures or be completely covered. Cement shall be handled in a manner that will prevent the inclusion of foreign materials and damage by water or dampness. Sand and aggregates shall be stored in a manner to prevent contamination or segregation.

1.6 SPECIAL INSPECTION

A qualified masonry inspector approved by the Contracting Officer shall perform inspection of the masonry work. Minimum qualifications for the masonry inspector shall be 5 years of reinforced masonry inspection experience or acceptance by a State, municipality, or other governmental body having a program of examining and certifying inspectors for reinforced masonry construction. The masonry inspector shall be present during preparation of masonry prisms, sampling and placing of masonry units, placement of reinforcement (including placement of dowels in footings and foundation walls), inspection of grout space, immediately prior to closing of cleanouts, and during grouting operations. The masonry inspector shall assure Contractor compliance with the drawings and specifications. The masonry inspector shall keep a complete record of all inspections and shall submit daily written reports to the Quality Control Supervisory Representative reporting the quality of masonry construction.

PART 2 PRODUCTS

2.1 GENERAL REQUIREMENTS

The source of materials which will affect the appearance of the finished work shall not be changed after the work has started except with Contracting Officer's approval.

2.2 CLAY OR SHALE BRICK

Color range and texture of clay or shale brick shall be as indicated in Section 09915 - COLOR SCHEDULE and shall conform to the approved sample. Grade SW shall be used for brick in contact with earth or grade and for all exterior work. Brick shall be tested for efflorescence. Clay or shale brick units shall be delivered factory-blended to provide a uniform appearance and color range in the completed wall.

2.2.1 Solid Clay or Shale Brick

Solid clay or shale brick shall conform to ASTM C 216, Type FBS. Brick size shall be modular and the nominal size of the brick used shall be 57 mm thick, 90 mm wide, and 190 mm long. Minimum compressive strength of the brick shall be 17.2 MPa

2.3 HIGH PERFORMANCE CONCRETE MASONRY UNITS (HPCMU)

(In case of conflict on High performance masonry units, specification section 04201-High performance concrete masonry shall govern) High performance concrete masonry units shall have a minimum net compressive strength at 28 days of 21.0 MPa as an average of five units with no individual unit less than 18.9 MPa net compressive strength when tested in accordance with ASTM C 90, ?\, \-ASTM C 140-\, and \-ASTM E 447-\. In addition to the manufacturer's recommended curing process, the HPCMU's shall be allowed to air cure in the manufacturers yard and/or job site a minimum of 10 days from the time of removal from the kiln. The minimum net compressive strength when tested ten days or less from time of removal from kiln shall be at least 18.9 MPa net compressive strength as an average of three units, with no individual unit less than 17.5 MPa net compressive strength prior to placement in wall. Cement shall have a low alkali content and be of one brand. The HPCMU shall be manufactured with a combination of cement, fly ash, and silica fume to give a dense mixture with good texture, high strength, and low absorption. Blending of limestone chips, cinders, unexpanded slag, calcareous and/or siliceous gravel, or cinder bottom ash is prohibited.

The normal dry (received) weights of various sizes of two core HPCMU's shall not exceed the weight shown below when tested in accordance with ASTM C 140. Weights given are for minimum face shell and web thickness allowed by ASTM C 90. If units are manufactured using "optimized webs" or thicker face shells than required by ASTM C 90, an adjustment in maximum block weight will be allowed based on the units' calculated volume.

WEIGHT REQUIREMENTS

Nominal Size (mm)	100x200x400	150x200x400	200x200x400	300x200x400
Normal Weight	7.3	8.6	11.4	15.9

(kg)

2.3.1 Kinds and Shapes

2.3.1.1 Architectural Units

Units shall have patterned face shell. Face shell pattern shall be split-face. Ground-face units shall be provided at sloped window sill veneer.. Units shall be integrally colored and provided with an integral liquid polymeric (water repellant) admixture ("Dry Block" by W.R. Grace Co.) in accordance with ASTM E 514-74 during manufacture. Color shall be as indicated in Section 09915 - COLOR SCHEDULE. Patterned face shell shall be properly aligned in the completed wall.

2.3.2 Fire-Rated HPCMU

High Performance Concrete masonry units used in fire-rated construction shown on the drawings shall be of minimum equivalent thickness for the fire rating indicated and the corresponding type of aggregates indicated in TABLE I. Units containing more than one of the aggregates listed in TABLE I will be rated on the aggregate requiring the greater minimum equivalent thickness to produce the required fire rating.

TABLE I

FIRE-RATED CONCRETE MASONRY UNITS

See note (a) below

Aggregate Type	Minimum equivalent thickness in mm (inches) for fire rating of: 4 hours	3 hours	2 hours
Pumice	120 (4.7)	100 (4.0)	75 (3.0)
Expanded slag	130 (5.0)	110 (4.2)	85 (3.3)
Expanded clay, shale, or slate	145 (5.7)	120 (4.8)	95 (3.7)

(a) Minimum equivalent thickness shall equal net volume as determined in conformance with ASTM C 140 divided by the product of the actual length and height of the face shell of the unit in millimeters . Where walls are to receive plaster or be faced with brick, or otherwise form an assembly; the thickness of plaster or brick or other material in the assembly will be included in determining the equivalent thickness.

2.4 GLASS BLOCK UNITS AND ACCESSORIES

Glass block units shall be size, type, pattern, and style specified. Units shall be made of clear colorless glass. Pattern shall be clear with 75 percent light transmission allowance. Ventilators and accessories shall be the products manufactured by or as recommended by the glass block

manufacturer.

2.4.1 Exterior Glass Block Units

Units shall be Standard Series "Solar Reflective", nominal 90 mm by 190 mm by 190 mm as manufactured by Nippon Electric Glass (NEG) through Glashaus, Inc. and Pittsburg Corning Corporation or approved equal.

2.4.2 Interior Glass Block Units

Units shall be Standard Series "Clear", nominal 90 mm by 190 mm by 190 mm as manufactured by Pittsburg Corning Corporation or approved equal and shall be 200 mm (7-3/4 inches) by 200 mm (7-3/4 inches) by by 100 mm (3-7/8 inches).]

2.4.3 Horizontal Joint Reinforcement

Joint reinforcement shall be factory fabricated from steel wire, and shall conform to ASTM A 82. Wire shall be zinc coated after fabrication by the hot-dip process conforming to ASTM A 153/A 153M, Class B-2. Reinforcement shall consist of two or more parallel longitudinal wires not lighter than 9 gauge weld connected with cross wires not lighter than 14 gauge at not greater than 200 mm (8 inches) on center. At least one longitudinal wire for each face of glass block shall be provided. Out-to-out dimension of the longitudinal wires shall be 40 mm (1-1/2 inches) less than the actual width of the block. Joint reinforcement in flat sections not less than 2.40 m (8 feet) long shall be provided, except that corner reinforcements and other special shapes may be shorter.

2.4.4 Strip Anchor

Perforated steel strip shall be not less than 20 gauge, minimum of 45 mm (1-3/4 inches) wide by 600 mm long and galvanized after fabrication.

2.4.5 Wire-Type Anchor

Steel wire shall be not less than 9 gauge of approved design suitable for use with the panel stiffener provided and galvanized after fabrication.

2.4.6 Expansion Strip

Dense fibrous glass batt or material shall be as recommended by the glass block manufacturer.

2.4.7 Packing (Backer Rods)

Polyethylene foam, neoprene, or filler shall be as recommended by the sealant manufacturer.

2.5 PRECAST CONCRETE ITEMS

Trim, lintels, copings, splashblocks and door sills shall be factory-made units from a plant regularly engaged in producing precast concrete units. Unless otherwise indicated, concrete shall be 28 MPa (4000 psi) minimum conforming to Section 03300 CAST-IN-PLACE STRUCTURAL CONCRETE using 13 mm (1/2 inch) to No. 4 nominal-size coarse aggregate, and minimum reinforcement shall be the reinforcement required for handling of the units. Clearance of 20 mm shall be maintained between reinforcement and faces of units. Unless precast-concrete items have been subjected during

manufacture to saturated-steam pressure of at least 827 kPa (120 psi) for at least 5 hours, the items, after casting, shall be either damp-cured for 24 hours or steam-cured and shall then be aged under cover for 28 days or longer. Cast-concrete members weighing over 35 kg shall have built-in loops of galvanized wire or other approved provisions for lifting and anchoring. Units shall have beds and joints at right angles to the face, with sharp true arises and shall be cast with drip grooves on the underside where units overhang walls. Exposed-to-view surfaces shall be free of surface voids, spalls, cracks, and chipped or broken edges. Precast units exposed-to-view shall be of uniform appearance and color. Unless otherwise specified, units shall have a smooth dense finish. Prior to use, each item shall be wetted and inspected for crazing. Items showing evidence of dusting, spalling, crazing, or having surfaces treated with a protective coating will be rejected.

2.5.1 Lintels

Precast or cast-in-place lintels, unless otherwise shown, shall be of a thickness equal to the wall and reinforced with two No. 16 bars for the full length. Top of lintels shall be labeled "TOP" or otherwise identified and each lintel shall be clearly marked to show location in the structure.

2.5.2 Sills and Copings

Sills and copings shall be cast with washes. Sills for windows having mullions shall be cast in sections with head joints at mullions and a 6 mm (1/4 inch) allowance for mortar joints. The ends of sills, except a 20 mm (3/4 inch) wide margin at exposed surfaces, shall be roughened for bond. Treads of door sills shall have rounded nosings.

2.5.3 Splash Blocks

Splash blocks shall be as detailed. Reinforcement shall be the manufacturer's standard.

2.6 MORTAR

Mortar shall be Type S in accordance with the proportion specification of ASTM C 270 except Type S cement-lime mortar proportions shall be 1 part cement, 1/2 part lime and 4-1/2 parts aggregate; when masonry cement ASTM C 91 is used the maximum air content shall be limited to 12 percent and performance equal to cement-lime mortar shall be verified. Verification of masonry cement performance shall be based on ASTM C 780 and ASTM C 1072. Mortar for prefaced concrete masonry units shall contain aggregates with 100 percent passing the 2.36 mm sieve and 95 percent passing the 1.18 mm sieve. Pointing mortar in kitchens shall contain ammonium stearate, or aluminum tri-stearate, or calcium stearate in an amount equal to 3 percent by weight of cement used. Cement shall have a low alkali content and be of one brand. Aggregates shall be from one source.

2.6.1 Mortar Admixtures

In cold weather, a non-chloride based accelerating admixture may be used subject to approval. Accelerating admixture shall be non-corrosive, shall contain less than 0.2 percent chlorides, and shall conform to ASTM C 494, Type C. All exposed exterior masonry (brick and split-face CMU units) shall be laid using mortar with an integral liquid polymeric (water repellant) admixture in accordance with ASTM E 514-74.

2.6.2 Coloring

Mortar coloring shall be added to the mortar used for exposed masonry surfaces to produce a uniform color as indicated in Section 09915: Color Schedule. Mortar color for split-face units shall be equal to split-face color and mortar color for brick shall be equal to brick color. Mortar coloring shall not exceed 3 percent of the weight of cement for carbon black and ten percent of the weight of cement for all other pigments. Mortar coloring shall be chemically inert, of finely ground limeproof pigment, and furnished in accurately pre-measured and packaged units that can be added to a measured amount of cement.

2.7 GROUT

Grout shall conform to ASTM C 476. Cement used in grout shall have a low alkali content. Grout slump shall be between 200 and 250 mm. Grout shall be used subject to the limitations of Table III. Proportions shall not be changed and materials with different physical or chemical characteristics shall not be used in grout for the work unless additional evidence is furnished that the grout meets the specified requirements.

2.7.1 Grout Admixtures

In cold weather, a non-chloride based accelerating admixture may be used subject to approval. Accelerating admixture shall be non-corrosive, shall contain less than 0.2 percent chlorides, and shall conform to ASTM C 494, Type C.

2.7.2 Grout Barriers

Grout barriers for vertical cores shall consist of fine mesh wire, fiberglass, or expanded metal.

2.8 ANCHORS, TIES, AND BAR POSITIONERS

Anchors and ties shall be fabricated without drips or crimps and shall be zinc-coated in accordance with ASTM A 153/A 153M, Class B-2. Steel wire used for anchors and ties shall be fabricated from steel wire conforming to ASTM A 82. Anchors and ties shall be sized to provide a minimum of 16 mm mortar cover from either face.

2.8.1 Wire Mesh Ties

Wire mesh for tying 100 mm (4 inch) thick concrete masonry unit partitions to other intersecting masonry partitions shall be 13 mm (1/2 inch) mesh of minimum 16 gauge steel wire. Minimum lengths shall be not less than 300 mm.

2.8.2 Wall Ties

Wall ties shall be rectangular-shaped or Z-shaped fabricated of 5 mm diameter zinc-coated steel wire. Rectangular wall ties shall be no less than 100 mm wide. Wall ties may also be of a continuous type conforming to paragraph JOINT REINFORCEMENT. Adjustable type wall ties, if approved for use, shall consist of two essentially U-shaped elements fabricated of 5 mm diameter zinc-coated steel wire. Adjustable ties shall be of the double pintle to eye type and shall allow a maximum of 13 mm eccentricity between each element of the tie. Play between pintle and eye opening shall be not more than 2 mm . The pintle and eye elements shall be formed so

that both can be in the same plane.

2.8.3 Dovetail Anchors

Dovetail anchors shall be of the flexible wire type, 5 mm diameter zinc-coated steel wire, triangular shaped, and attached to a 12 gauge or heavier steel dovetail section. These anchors shall be used for anchorage of veneer wythes or composite-wall facings extending over the face of concrete columns, beams, or walls. Cells within vertical planes of these anchors shall be filled solid with grout for full height of walls or partitions, or solid units may be used. Dovetail slots are specified in Section 03300 CAST-IN-PLACE STRUCTURAL CONCRETE.

2.8.4 Adjustable Anchors

Adjustable anchors shall be 5 mm diameter steel wire, triangular-shaped. Anchors attached to steel shall be 8 mm diameter steel bars placed to provide 2 mm play between flexible anchors and structural steel members. Spacers shall be welded to rods and columns. Equivalent welded-on steel anchor rods or shapes standard with the flexible-anchor manufacturer may be furnished when approved. Welds shall be cleaned and given one coat of zinc-rich touch up paint.

2.8.5 Bar Positioners

Bar positioners, used to prevent displacement of reinforcing bars during the course of construction, shall be factory fabricated from 9 gauge steel wire or equivalent, and coated with a hot-dip galvanized finish. Not more than one wire shall cross the cell.

2.9 JOINT REINFORCEMENT

Joint reinforcement shall be factory fabricated from steel wire conforming to ASTM A 82, welded construction. Tack welding will not be acceptable in reinforcement used for wall ties. Wire shall have zinc coating conforming to ASTM A 153/A 153M, Class B-2. All wires shall be a minimum of 9 gauge. Reinforcement shall be ladder type design, having one longitudinal wire in the mortar bed of each face shell for hollow units and one wire for solid units. Joint reinforcement shall be placed a minimum of 16 mm cover from either face. The distance between crosswires shall not exceed 400 mm . Joint reinforcement for straight runs shall be furnished in flat sections not less than 3 m long. Joint reinforcement shall be provided with factory formed corners and intersections. If approved for use, joint reinforcement may be furnished with adjustable wall tie features.

2.10 REINFORCING STEEL BARS AND RODS

Reinforcing steel bars and rods shall conform to ASTM A 615/A 615M, Grade 60.

2.11 CONTROL JOINT KEYS

Control joint keys shall be a factory fabricated solid section of natural or synthetic rubber (or combination thereof) conforming to ASTM D 2000or polyvinyl chloride conforming to ASTM D 2287. The material shall be resistant to oils and solvents. The control joint key shall be provided with a solid shear section not less than 16 mm (5/8 inch) thick and 10 mm (3/8 inch) thick flanges, with a tolerance of plus or minus 2 mm (1/16 inch). The control joint key shall fit neatly, but without forcing, in

masonry unit jamb sash grooves. The control joint key shall be flexible at a temperature of minus 34 degrees C (minus 30 degrees F) after five hours exposure, and shall have a durometer hardness of not less than 70 when tested in accordance with ASTM D 2240.

2.12 EXPANSION-JOINT MATERIALS

Backer rod and sealant shall be adequate to accommodate joint compression equal to 50 percent of the width of the joint. The backer rod shall be compressible rod stock of polyethylene foam, polyurethane foam, butyl rubber foam, or other flexible, nonabsorptive material as recommended by the sealant manufacturer. Sealant shall conform to Section 07900JOINT SEALING.

2.13 INSULATION

(am#4)

2.13.1 Rigid Board-Type Insulation

Rigid board-type insulation shall be extruded polystyrene, polyurethane, or polyisocyanurate. Polystyrene shall conform to ASTM C 578. Polyurethane or polyisocyanurate shall conform to ASTM C 1289, Type I, **Class 1 or 2 (am#4)**, faced with aluminum foil on both sides of the foam. The insulation shall be a standard product and shall be marked with not less than the manufacturer's trademark or name, the specification number, the permeance and R-values.

2.13.1.1 Insulation Thickness and Air Space

The cavity space shall allow for a maximum insulation thickness of 25 mm, and a minimum air space of 20 mm (3/4 inch).

2.13.1.2 Aged R-Value

The insulation shall provide a minimum aged R-value of 10.8 for the overall thickness. The aged R-value shall be determined at 24 degrees C (75 degrees F) in accordance with the appropriate referenced specification. The stated R-value of the insulation shall be certified by an independent testing laboratory or certified by an independent Registered Professional Engineer if tests are conducted in the manufacturer's laboratory.

2.13.1.3 Recovered Material

Insulation shall contain the highest practicable percentage of recovered material derived from solid waste (but material reused in the manufacturing process cannot be counted toward the percentage of recovered material). Where two materials have the same price and performance, the one containing the higher recovered material content shall be provided. The polyurethane or polyisocyanurate foam shall have a minimum recovered material content of 9 percent by weight of the core material.

2.13.2 Insulation Adhesive

Insulation adhesive shall be specifically prepared to adhere the insulation to the masonry dampproofing and, where applicable, to the thru-wall flashing. The adhesive shall not deleteriously affect the insulation or dampproofing, and shall have a record of satisfactory and proven performance for the conditions under which to be used.

2.14 FLASHING

Flashing shall be as specified in Section 07600 SHEET METALWORK, GENERAL.

2.15 WEEP HOLE VENTILATORS

Weephole ventilators shall be prefabricated aluminum grill type vents designed to prevent insect entry with maximum air entry. Ventilators shall be sized to match modular construction with a standard 10 mm (3/8 inch mortar joint.

2.16 MORTAR DROPPING COLLECTION DEVICE

Mortar dropping collection device shall be manufactured of high density polyethylene, nylon or recycled polyester designed to catch mortar droppings above the level of the weep holes. The collection device will allow water and air to move through the device to the weep holes.

PART 3 EXECUTION

3.1 ENVIRONMENTAL REQUIREMENTS

3.1.1 Hot Weather Installation

The following precautions shall be taken if masonry is erected when the ambient air temperature is more than 37 degrees C in the shade and the relative humidity is less than 50 percent. All masonry materials shall be shaded from direct sunlight; mortar beds shall be spread no more than 1.2 m ahead of masonry; masonry units shall be set within one minute of spreading mortar; and after erection, masonry shall be protected from direct exposure to wind and sun for 48 hours.

3.1.2 Cold Weather Installation

Before erecting masonry when ambient temperature or mean daily air temperature falls below 4 degrees C, a written statement of proposed cold weather construction procedures shall be submitted for approval. The following precautions shall be taken during all cold weather erection.

3.1.2.1 Preparation

Ice or snow formed on the masonry bed shall be thawed by the application of heat. Heat shall be applied carefully until the top surface of the masonry is dry to the touch. Sections of masonry deemed frozen and damaged shall be removed before continuing construction of those sections.

a. Air Temperature 4 to 0 degrees C. Sand or mixing water shall be heated to produce mortar temperatures between 4 degrees C and 49 degrees C.

b. Air Temperature 0 to minus 4 degrees C. Sand and mixing water shall be heated to produce mortar temperatures between 4 degrees C and 49 degrees C. Temperature of mortar on boards shall be maintained above freezing.

c. Air Temperature minus 4 to minus 7 degrees C. Sand and mixing water shall be heated to provide mortar temperatures between 4

degrees C and 49 degrees C. Temperature of mortar on boards shall be maintained above freezing. Sources of heat shall be used on both sides of walls under construction. Windbreaks shall be employed when wind is in excess of 24 km/hour.

d. Air Temperature minus 7 degrees C and below. Sand and mixing water shall be heated to provide mortar temperatures between 4 degrees C and 49 degrees C. Enclosure and auxiliary heat shall be provided to maintain air temperature above 0 degrees C. Temperature of units when laid shall not be less than minus 7 degrees C.

3.1.2.2 Completed Masonry and Masonry Not Being Worked On

a. Mean daily air temperature 4 degrees C to 0 degrees C. Masonry shall be protected from rain or snow for 24 hours by covering with weather-resistive membrane.

b. Mean daily air temperature 0 degrees C to minus 4 degrees C. Masonry shall be completely covered with weather-resistant membrane for 24 hours.

c. Mean Daily Air Temperature minus 4 degrees C to minus 7 degrees C. Masonry shall be completely covered with insulating blankets or equally protected for 24 hours.

d. Mean Daily Temperature minus 7 degrees C and Below. Masonry temperature shall be maintained above 0 degrees C for 24 hours by enclosure and supplementary heat, by electric heating blankets, infrared heat lamps, or other approved methods.

3.1.2.3 Glass Block Requirements

Glass block shall not be laid when the air temperature is below 4 degrees C on a falling thermometer, or when it appears probable that temperatures below 4 degrees C will be encountered before the mortar has set, unless adequate means are provided for protecting the work from freezing. Protection shall consist of heating and maintaining the temperature of the glass block and mortar materials at not less than 4 degrees C and not more than 71 degrees C. After erection, an air temperature above 4 degrees C on both sides of the glass block shall be maintained for not less than 72 hours. Work will not be permitted with or on frozen materials. Glass block work may be started at 1 degree C on a rising thermometer.

3.2 LAYING MASONRY UNITS

Masonry units shall be laid in running bond pattern unless otherwise indicated. Facing courses shall be level with back-up courses, unless the use of adjustable ties has been approved in which case the tolerances shall be plus or minus 13 mm. Each unit shall be adjusted to its final position while mortar is still soft and plastic. Units that have been disturbed after the mortar has stiffened shall be removed, cleaned, and relaid with fresh mortar. Air spaces, cavities, chases, expansion joints, and spaces to be grouted shall be kept free from mortar and other debris. Units used in exposed masonry surfaces shall be selected from those having the least amount of chipped edges or other imperfections detracting from the appearance of the finished work. Vertical joints shall be kept plumb. Units being laid and surfaces to receive units shall be free of water film and frost. Solid units shall be laid in a nonfurrowed full bed of mortar.

Mortar for veneer wythes shall be beveled and sloped toward the center of the wythe from the cavity side. Units shall be shoved into place so that the vertical joints are tight. Vertical joints of brick and the vertical face shells of concrete masonry units, except where indicated at control, expansion, and isolation joints, shall be completely filled with mortar. Mortar will be permitted to protrude up to 13 mm into the space or cells to be grouted. Means shall be provided to prevent mortar from dropping into the space below. In double wythe construction, the inner wythe may be brought up not more than 400 mm ahead of the outer wythe. Collar joints shall be filled with mortar or grout during the laying of the facing wythe, and filling shall not lag the laying of the facing wythe by more than 200 mm.

3.2.1 Surface Preparation

Surfaces upon which masonry is placed shall be cleaned of laitance, dust, dirt, oil, organic matter, or other foreign materials and shall be slightly roughened to provide a surface texture with a depth of at least 3 mm. Sandblasting shall be used, if necessary, to remove laitance from pores and to expose the aggregate.

3.2.2 Forms and Shores

Forms and shores shall be sufficiently rigid to prevent deflections which may result in cracking or other damage to supported masonry and sufficiently tight to prevent leakage of mortar and grout. Supporting forms and shores shall not be removed in less than 10 days.

3.2.3 Concrete Masonry Units

Units in piers, pilasters, columns, starting courses on footings, solid foundation walls, lintels, and beams, and where cells are to be filled with grout shall be full bedded in mortar under both face shells and webs. Other units shall be full bedded under both face shells. Head joints shall be filled solidly with mortar for a distance in from the face of the unit not less than the thickness of the face shell. Foundation walls below grade shall be grouted solid. Jamb units shall be of the shapes and sizes to conform with wall units. Solid units may be incorporated in the masonry work where necessary to fill out at corners, gable slopes, and elsewhere as approved. Double walls shall be stiffened at wall-mounted plumbing fixtures by use of strap anchors, two above each fixture and two below each fixture, located to avoid pipe runs, and extending from center to center of the double wall. Walls and partitions shall be adequately reinforced for support of wall-hung plumbing fixtures when chair carriers are not specified.

3.2.4 Clay or Shale Brick Units

Brick facing shall be laid with the better face exposed. Brick shall be laid in running bond with each course bonded at corners, unless otherwise indicated. Molded brick shall be laid with the frog side down. Brick that is cored, recessed, or has other deformations may be used in sills, treads, soldier courses, except where deformations will be exposed to view.

3.2.4.1 Wetting of Units

Wetting of clay, shale brick, or hollow brick units having an initial rate of absorption of more than 0.155 gm per minute per square cm (1 gm per minute per square inch) of bed surface shall be in conformance with ASTM C

67. The method of wetting shall ensure that each unit is nearly saturated but surface dry when laid.

3.2.4.2 Solid Units

Bed, head, and collar joints shall be completely filled with mortar.

3.2.4.3 Hollow Units

Hollow units shall be laid as specified for concrete masonry units.

3.2.5 Tolerances

Masonry shall be laid plumb, true to line, with courses level. Bond pattern shall be kept plumb throughout. Corners shall be square unless noted otherwise. Except for walls constructed of prefaced concrete masonry units, masonry shall be laid within the following tolerances (plus or minus unless otherwise noted):

3.2.5.1 Surface to Receive Ceramic Tile

Masonry surfaces shall be level and plumb with struck joints and square openings. No variations in the surfaces exceeding 3 mm in 30 meters and no abrubt irregularities exceeding 1.6 mm shall be allowded where ceramic tile installed over masonry by the dry set method.

3.2.5.2 Surfaces to Receive Vinyl Wallcovering

Masonry surfaces shall be level and plumb with struck joints and square openings. No variations in the surfaces exceeding 3 mm in 30 meters and no abrupt irregularities shall be allowed where vinyl coated wallcovering is installed over masonry areas.

TABLE II

TOLERANCES

Variation from the plumb in the lines and surfaces of columns, walls and arises	
In adjacent masonry units	3 mm
In 3 m	6 mm
In 6 m	10 mm
In 12 m or more	13 mm
Variations from the plumb for external corners, expansion joints, and other conspicuous lines	
In 6 m	6 mm
In 12 m or more	13 mm
Variations from the level for exposed lintels, sills, parapets, horizontal grooves, and other	

TOLERANCES

conspicuous lines	
In 6 m	6 mm
In 12 m or more	13 mm
Variation from level for bed joints and top surfaces of bearing walls	
In 3 m	6 mm
In 12 m or more	13 mm
Variations from horizontal lines	
In 3 m	6 mm
In 6 m	10 mm
In 12 m or more	13 mm
Variations in cross sectional dimensions of columns and in thickness of walls	
Minus	6 mm
Plus	13 mm

3.2.6 Cutting and Fitting

Full units of the proper size shall be used wherever possible, in lieu of cut units. Cutting and fitting, including that required to accommodate the work of others, shall be done by masonry mechanics using power masonry saws. Concrete masonry units may be wet or dry cut. Wet cut units, before being placed in the work, shall be dried to the same surface-dry appearance as uncut units being laid in the wall. Cut edges shall be clean, true and sharp. Openings in the masonry shall be made carefully so that wall plates, cover plates or escutcheons required by the installation will completely conceal the openings and will have bottoms parallel with the masonry bed joints. Reinforced masonry lintels shall be provided above openings over 300 mm wide for pipes, ducts, cable trays, and other wall penetrations, unless steel sleeves are used.

3.2.7 Jointing

Joints shall be tooled when the mortar is thumbprint hard. Horizontal joints shall be tooled last. Joints shall be brushed to remove all loose and excess mortar. Mortar joints shall be finished as follows:

3.2.7.1 Flush Joints

Joints in concealed masonry surfaces and joints at electrical outlet boxes in wet areas shall be flush cut. Flush cut joints shall be made by cutting off the mortar flush with the face of the wall. Joints in unparged masonry walls below grade shall be pointed tight. Flush joints for architectural units, such as fluted units, shall completely fill both the head and bed joints.

3.2.7.2 Tooled Joints

Joints in exposed exterior and interior brick masonry surfaces shall be tooled slightly concave. Joints in exposed exterior split-face cmu masonry surfaces shall be tooled flush. Joints shall be tooled with a jointer slightly larger than the joint width so that complete contact is made along the edges of the unit. Tooling shall be performed so that the mortar is compressed and the joint surface is sealed. Jointer of sufficient length shall be used to obtain a straight and true mortar joint.

3.2.7.3 Door and Window Frame Joints

On the exposed interior side of exterior frames, joints between frames and abutting masonry walls shall be raked to a depth of 10 mm. On the exterior side of exterior frames, joints between frames and abutting masonry walls shall be raked to a depth of 10 mm.

3.2.8 Joint Widths

Joint widths shall be as follows:

3.2.8.1 Concrete Masonry Units

Concrete masonry units shall have 10 mm (3/8 inch) joints.

3.2.8.2 Brick

Brick joint widths shall be the difference between the actual and nominal dimensions of the brick in either height or length. Brick expansion joint widths shall be as shown.

3.2.9 Embedded Items

Spaces around built-in items shall be filled with mortar. Openings around flush-mount electrical outlet boxes in wet locations shall be pointed with mortar. Anchors, ties, wall plugs, accessories, flashing, pipe sleeves and other items required to be built-in shall be embedded as the masonry work progresses. Anchors, ties and joint reinforcement shall be fully embedded in the mortar. Cells receiving anchor bolts and cells of the first course below bearing plates shall be filled with grout.

3.2.10 Unfinished Work

Unfinished work shall be stepped back for joining with new work. Toothing may be resorted to only when specifically approved. Loose mortar shall be removed and the exposed joints shall be thoroughly cleaned before laying new work.

3.2.11 Masonry Wall Intersections

Each course shall be masonry bonded at corners and elsewhere as shown. Masonry walls shall be anchored or tied together at corners and intersections with bond beam reinforcement and prefabricated corner or tee pieces of joint reinforcement as shown.

3.2.12 Partitions

Partitions shall be continuous from floor to underside of floor or roof deck where shown. Openings in firewalls around joists or other structural

members shall be filled as indicated or approved. Where suspended ceilings on both sides of partitions are indicated, the partitions other than those shown to be continuous may be stopped approximately 100 mm (4 inches) above the ceiling level. An isolation joint shall be placed in the intersection between partitions and structural or exterior walls as shown. Interior partitions having 100 mm (4 inch) nominal thick units shall be tied to intersecting partitions of 100 mm (4 inch) units, 125 mm into partitions of 150 mm (6 inch) units, and 175 into partitions of 200 mm (8 inch) or thicker units. Cells within vertical plane of ties shall be filled solid with grout for full height of partition or solid masonry units may be used. Interior partitions having masonry walls over 100 mm (4 inches) thick shall be tied together with joint reinforcement. Partitions containing joint reinforcement shall be provided with prefabricated pieces at corners and intersections or partitions.

3.3 ANCHORED VENEER CONSTRUCTION

The inner and outer wythes shall be completely separated by a continuous airspace as shown on the drawings. Both the inner and the outer wythes shall be laid up together except when adjustable joint reinforcement assemblies are approved for use or when dampproofing or board-type insulation is installed against the inner wythe. When both wythes are not brought up together, through-wall flashings shall be protected from damage until they are fully enclosed in the wall. The airspace between the wythes shall be kept clear and free of mortar droppings. A coarse gravel or drainage material shall be placed behind the weep holes in the cavity to a minimum depth of 100 mm of coarse aggregate or 250 mm of drainage material to keep mortar droppings from plugging the weep holes.

3.3.1 Dampproofing and Board-Type Insulation

Masonry units to receive dampproofing and board-type insulation shall be free from chipped edges, protrusions, cracks, and other imperfections which could interfere with installed system. Joint reinforcement, anchors, and ties shall be kept clean of dampproofing, moisture, and other foriegn matter when the outer wythe is laid. Dampproofing is specified in Section 07110 BITUMINOUS DAMPPROOFING. Insulation shall be kept dry prior to, during, and after installation. The cavity between the wythes shall not be filled with loose fill insulation.

3.4 WEEP HOLES

Weep holes shall be provided not more than 600 mm on centers in mortar joints of the exterior wythe above wall flashing, over foundations, bond beams, through wall flashings, and any other horizontal interruptions of the cavity. Weep holes shall be formed by placing short lengths of well-greased No. 10, 8 mm (5/16 inch) nominal diameter, braided cotton sash cord in the mortar and withdrawing the cords after the wall has been completed. orWeep holes shall be constructed using weep hole ventilators. Other approved methods may be used for providing weep holes. Weep holes shall be set above the base flashing as specified along with the mortar dropping collection device. The base flashing shall extend up the inner wythe a height of six inches above the mortar dropping collection device, or per manufacturers recommendations. Weep holes shall be kept free of mortar and other obstructions.

3.5 COMPOSITE WALLS

Masonry wythes shall be tied together with joint reinforcement or with unit

wall ties. Facing shall be anchored to concrete backing with wire dovetail anchors set in slots built in the face of the concrete as specified in Section 03300 CAST-IN-PLACE STRUCTURAL CONCRETE. The facing wythe shall be anchored or tied to the backup at a maximum spacing of 400 mm (16 inches) on center vertically and 600 mm (24 inches) on center horizontally. Unit ties shall be spaced not over 600 mm (24 inches) on centers horizontally, in courses not over 400 mm (16 inches) apart vertically, staggered in alternate courses. Ties shall be laid not closer than 16 mm to either masonry face. Ties shall not extend through control joints. Collar joints between masonry facing and masonry backup shall be filled solidly with grout.

3.6 GLASS BLOCK

Glass block shall be installed as recommended by the glass block manufacturer and as specified in paragraph ENVIRONMENTAL REQUIREMENTS, after coordinating the work with other trades to accommodate embedded items.

3.7 MORTAR

Mortar shall be mixed in a mechanically operated mortar mixer for at least 3 minutes, but not more than 5 minutes. Measurement of ingredients for mortar shall be by volume. Ingredients not in containers, such as sand, shall be accurately measured by the use of measuring boxes. Water shall be mixed with the dry ingredients in sufficient amount to provide a workable mixture which will adhere to the vertical surfaces of masonry units. Mortar that has stiffened because of loss of water through evaporation shall be retempered by adding water to restore the proper consistency and workability. Mortar that has reached its initial set or that has not been used within 2-1/2 hours after mixing shall be discarded.

3.8 REINFORCING STEEL

Reinforcement shall be cleaned of loose, flaky rust, scale, grease, mortar, grout, or other coating which might destroy or reduce its bond prior to placing grout. Bars with kinks or bends not shown on the drawings shall not be used. Reinforcement shall be placed prior to grouting. Unless otherwise indicated, vertical wall reinforcement shall extend to within 50 mm of tops of walls.

3.8.1 Positioning Bars

Vertical bars shall be accurately placed within the cells at the positions indicated on the drawings. A minimum clearance of 13 mm shall be maintained between the bars and masonry units. Minimum clearance between parallel bars shall be one diameter of the reinforcement. Vertical reinforcing may be held in place using bar positioners located near the ends of each bar and at intermediate intervals of not more than 192 diameters of the reinforcement. Column and pilaster ties shall be wired in position around the vertical steel. Ties shall be in contact with the vertical reinforcement and shall not be placed in horizontal bed joints.

3.8.2 Splices

Bars shall be lapped a minimum of 48 diameters of the reinforcement. Welded or mechanical connections shall develop at least 125 percent of the specified yield strength of the reinforcement.

3.9 JOINT REINFORCEMENT

Joint reinforcement shall be installed at 400 mm (16 inches) on center or as indicated. Reinforcement shall be lapped not less than 150 mm. Prefabricated sections shall be installed at corners and wall intersections. The longitudinal wires of joint reinforcement shall be placed to provide not less than 16 mm cover to either face of the unit.

3.10 PLACING GROUT

Cells containing reinforcing bars shall be filled with grout. Hollow masonry units in walls or partitions supporting plumbing, heating, or other mechanical fixtures, voids at door and window jambs, and other indicated spaces shall be filled solid with grout. Cells under lintel bearings on each side of openings shall be filled solid with grout for full height of openings. Walls below grade, lintels, and bond beams shall be filled solid with grout. Units other than open end units may require grouting each course to preclude voids in the units. Grout not in place within 1-1/2 hours after water is first added to the batch shall be discarded. Sufficient time shall be allowed between grout lifts to preclude displacement or cracking of face shells of masonry units. If blowouts, flowouts, misalignment, or cracking of face shells should occur during construction, the wall shall be torn down and rebuilt.

3.10.1 Vertical Grout Barriers for Fully Grouted Walls

Grout barriers shall be provided not more than 10 m apart, or as required, to limit the horizontal flow of grout for each pour.

3.10.2 Horizontal Grout Barriers

Grout barriers shall be embedded in mortar below cells of hollow units receiving grout.

3.10.3 Grout Holes and Cleanouts

3.10.3.1 Grout Holes

Grouting holes shall be provided in slabs, spandrel beams, and other in-place overhead construction. Holes shall be located over vertical reinforcing bars or as required to facilitate grout fill in bond beams. Additional openings spaced not more than 400 mm (16 inches) on centers shall be provided where grouting of all hollow unit masonry is indicated. Openings shall not be less than 100 mm in diameter or 75 by 100 mm in horizontal dimensions. Upon completion of grouting operations, grouting holes shall be plugged and finished to match surrounding surfaces.

3.10.3.2 Cleanouts for Hollow Unit Masonry Construction

Cleanout holes shall be provided at the bottom of every pour in cores containing vertical reinforcement when the height of the grout pour exceeds 1.5 m. Where all cells are to be grouted, cleanout courses shall be constructed using bond beam units in an inverted position to permit cleaning of all cells. Cleanout holes shall be provided at a maximum spacing of 800 mm (32 inches) where all cells are to be filled with grout. A new series of cleanouts shall be established if grouting operations are stopped for more than 4 hours. Cleanouts shall not be less than 75 by 100 mm openings cut from one face shell. Manufacturer's standard cutout units may be used at the Contractor's option. Cleanout holes shall not be closed until masonry work, reinforcement, and final cleaning of the grout spaces

have been completed and inspected. For walls which will be exposed to view, cleanout holes shall be closed in an approved manner to match surrounding masonry.

3.10.4 Grouting Equipment

3.10.4.1 Grout Pumps

Pumping through aluminum tubes will not be permitted. Pumps shall be operated to produce a continuous stream of grout without air pockets, segregation, or contamination. Upon completion of each day's pumping, waste materials and debris shall be removed from the equipment, and disposed of outside the masonry.

3.10.4.2 Vibrators

Internal vibrators shall maintain a speed of not less than 5,000 impulses per minute when submerged in the grout. At least one spare vibrator shall be maintained at the site at all times. Vibrators shall be applied at uniformly spaced points not further apart than the visible effectiveness of the machine. Duration of vibration shall be limited to time necessary to produce satisfactory consolidation without causing segregation.

3.10.5 Grout Placement

Masonry shall be laid to the top of a pour before placing grout. Grout shall not be placed in two-wythe solid unit masonry cavity until mortar joints have set for at least 3 days during hot weather and 5 days during cold damp weather. Grout shall not be placed in hollow unit masonry until mortar joints have set for at least 24 hours. Grout shall be placed using a hand bucket, concrete hopper, or grout pump to completely fill the grout spaces without segregation of the aggregates. Vibrators shall not be inserted into lower pours that are in a semi-solidified state. The height of grout pours and type of grout used shall be limited by the dimensions of grout spaces as indicated in Table III. Low-lift grout methods may be used on pours up to and including 1.5 m in height. High-lift grout methods shall be used on pours exceeding 1.5 m in height.

3.10.5.1 Low-Lift Method

Grout shall be placed at a rate that will not cause displacement of the masonry due to hydrostatic pressure of the grout. Mortar protruding more than 13 mm into the grout space shall be removed before beginning the grouting operation. Grout pours 300 mm or less in height shall be consolidated by mechanical vibration or by puddling. Grout pours over 300 mm in height shall be consolidated by mechanical vibration and reconsolidated by mechanical vibration after initial water loss and settlement has occurred. Vibrators shall not be inserted into lower pours that are in a semi-solidified state. Low-lift grout shall be used subject to the limitations of Table III.

3.10.5.2 High-Lift Method

Mortar droppings shall be cleaned from the bottom of the grout space and from reinforcing steel. Mortar protruding more than 6 mm into the grout space shall be removed by dislodging the projections with a rod or stick as the work progresses. Reinforcing, bolts, and embedded connections shall be rigidly held in position before grouting is started. CMU units shall not be pre-wetted. Grout, from the mixer to the point of deposit in the grout

space shall be placed as rapidly as practical by pumping and placing methods which will prevent segregation of the mix and cause a minimum of grout splatter on reinforcing and masonry surfaces not being immediately encased in the grout lift. The individual lifts of grout shall be limited to 1.2 m in height. The first lift of grout shall be placed to a uniform height within the pour section and vibrated thoroughly to fill all voids. This first vibration shall follow immediately behind the pouring of the grout using an approved mechanical vibrator. After a waiting period sufficient to permit the grout to become plastic, but before it has taken any set, the succeeding lift shall be poured and vibrated 300 to 450 mm into the preceding lift. If the placing of the succeeding lift is going to be delayed beyond the period of workability of the preceding, each lift shall be reconsolidated by reworking with a second vibrator as soon as the grout has taken its settlement shrinkage. The waiting, pouring, and reconsolidation steps shall be repeated until the top of the pour is reached. The top lift shall be reconsolidated after the required waiting period. The high-lift grouting of any section of wall between vertical grout barriers shall be completed to the top of a pour in one working day unless a new series of cleanout holes is established and the resulting horizontal construction joint cleaned. High-lift grout shall be used subject to the limitations in Table III.

TABLE III

POUR HEIGHT AND TYPE OF GROUT FOR VARIOUS GROUT SPACE DIMENSIONS

Maximum Grout Pour Height (m) (4)	Grout Type	Grouting Procedure	Minimum Dimensions of the Total Clear Areas Within Grout Spaces and Cells (mm) (1,2) Multiwythe Masonry (3)	Hollow-unit Masonry
0.3	Fine	Low Lift	20	40 x 50
1.5	Fine	Low Lift	50	50 x 75
2.4	Fine	High Lift	50	50 x 75
3.6	Fine	High Lift	65	65 x 75
7.3	Fine	High Lift	75	75 x 75
0.3	Coarse	Low Lift	40	40 x 75
1.5	Coarse	Low Lift	50	65 x 75
2.4	Coarse	High Lift	50	75 x 75
3.6	Coarse	High Lift	65	75 x 75
7.3	Coarse	High Lift	75	75 x 100

Notes:

(1) The actual grout space or cell dimension must be larger than the sum of the following items:
a) The required minimum dimensions of total clear areas given in the table above;
b) The width of any mortar projections within the space;
c) The horizontal projections of the diameters of the horizontal reinforcing bars within a cross section of the grout space or cell.

(2) The minimum dimensions of the total clear areas shall be made up of one or more open areas, with at least one area being 20 mm or greater in width.

(3) For grouting spaces between masonry wythes.

(4) Where only cells of hollow masonry units containing reinforcement are grouted, the maximum height of the pour shall not exceed the distance between horizontal bond beams.

3.11 BOND BEAMS

Bond beams shall be filled with grout and reinforced as indicated on the drawings. Grout barriers shall be installed under bond beam units to retain the grout as required. Reinforcement shall be continuous, including around corners, except through control joints or expansion joints, unless otherwise indicated on the drawings. Where splices are required for continuity, reinforcement shall be lapped 48 bar diameters. A minimum clearance of 13 mm shall be maintained between reinforcement and interior faces of units.

3.12 CONTROL JOINTS

Control joints shall be provided as indicated and shall be constructed by using special control-joint unitsand/or sh jamb units with control joint key in accordance with the details shown on the drawings. Sash jamb units shall have a 19 by 19 mm (3/4 by 3/4 inch) groove near the center at end of each unit. The vertical mortar joint at control joint locations shall be continuous, including through all bond beams except the floor levels (second floor, third floor etc.) or the roof level bond beams. This shall be accomplished by utilizing half blocks in alternating courses on each side of the joint. The control joint key shall be interrupted in courses containing continuous bond beam steel. In single wythe exterior masonry walls, the exterior control joints shall be raked to a depth of 20 mm; backer rod and sealant shall be installed in accordance with Section 07900 JOINT SEALING. Exposed interior control joints shall be raked to a depth of 6 mm . Concealed control joints shall be flush cut.

3.13 BRICK EXPANSION JOINTS AND CONCRETE MASONRY VENEER JOINTS

Brick expansion joints and concrete masonry veneer joints shall be provided and constructed as shown on the drawings. Joints shall be kept free of mortar and other debris.

3.14 SHELF ANGLES

Shelf angles shall be adjusted as required to keep the masonry level and at the proper elevation. Shelf angles shall be galvanized. Shelf angles shall be provided in sections not longer than 3 m and installed with a 6 mm gap between sections. Shelf angles shall be mitered and welded at building corners with each angle not shorter than 1.2 m, unless limited by wall configuration.

3.15 LINTELS

3.15.1 Masonry Lintels

Masonry lintels shall be constructed with lintel units filled solid with grout in all courses and reinforced with a minimum of two No. 4 bars in the bottom course unless otherwise indicated on the drawings. Lintel reinforcement shall extend beyond each side of masonry opening 40 bar diameters or 600 mm, whichever is greater. Reinforcing bars shall be supported in place prior to grouting and shall be located 15 mm above the bottom inside surface of the lintel unit.

3.15.2 Precast Concrete and Steel Lintels

Precast concrete lintels with the same dimensions, reinforcing, and bearing lengths may be used for cast-in-place concrete lintels shown on the drawings. Precast lintels shall have oversized holes (four times bar diameter)to thread jamb vertical reinforcing through. Epoxy grout space around reinforcing after lintel has been set. Precast concrete and steel lintels shall be as shown on the drawings. Lintels shall be set in a full bed of mortar with faces plumb and true. Steel and precast lintels shall have a minimum bearing length of 200 mm (8 inches) unless otherwise indicated on the drawings.

3.16 SILLS AND COPINGS

Sills and copings shall be set in a full bed of mortar with faces plumb and true.

3.17 ANCHORAGE TO CONCRETE AND STRUCTURAL STEEL

3.17.1 Anchorage to Concrete

Anchorage of masonry to the face of concrete columns, beams, or walls shall be with dovetail anchors spaced not over 400 mm (16 inches) on centers vertically and 600 mm (24 inches) on center horizontally.

3.17.2 Anchorage to Structural Steel

Masonry shall be anchored to vertical structural steel framing with adjustable steel wire anchors spaced not over 400 mm (16 inches) on centers vertically, and if applicable, not over 600 mm (24 inches) on centers horizontally.

3.18 INSULATION

Anchored veneer walls shall be insulated, where shown, by installing board-type insulation on the cavity side of the inner wythe. Board type insulation shall be applied directly to the dampproofed masonry or thru-wall flashing with adhesive. Insulation shall be neatly fitted between obstructions without impaling of insulation on ties or anchors. The insulation shall be applied in parallel courses with vertical joints breaking midway over the course below and shall be applied in moderate contact with adjoining units without forcing, and shall be cut to fit neatly against adjoining surfaces.

3.19 SPLASH BLOCKS

Splash blocks shall be located as shown.

3.20 POINTING AND CLEANING

After mortar joints have attained their initial set, but prior to hardening, mortar and grout daubs or splashings shall be completely removed from masonry-unit surfaces that will be exposed, painted, dampproofing, insulated with board-type insulation, or covered with vinyl coated wallcovering. Before completion of the work, defects in joints of masonry to be exposed or painted shall be raked out as necessary, filled with mortar, and tooled to match existing joints. Immediately after grout work is completed, scum and stains which have percolated through the masonry

work shall be removed using a high pressure stream of water and a stiff bristled brush. Masonry surfaces shall not be cleaned, other than removing excess surface mortar, until mortar in joints has hardened. Masonry surfaces shall be left clean, free of mortar daubs, dirt, stain, and discoloration, including scum from cleaning operations, and with tight mortar joints throughout. Metal tools and metal brushes shall not be used for cleaning.

3.20.1 Concrete Masonry Unit and

Exposed concrete masonry unit and shall be dry-brushed at the end of each day's work and after any required pointing, using stiff-fiber bristled brushes.

3.20.2 Clay or Shale Brick Surfaces

Exposed clay or shale brick masonry surfaces shall be cleaned as necessary to obtain surfaces free of stain, dirt, mortar and grout daubs, efflorescence, and discoloration or scum from cleaning operations. After cleaning, the sample panel of similar material shall be examined for discoloration or stain as a result of cleaning. If the sample panel is discolored or stained, the method of cleaning shall be changed to assure that the masonry surfaces in the structure will not be adversely affected. The exposed masonry surfaces shall be water-soaked and then cleaned with a solution proportioned 30 milliliters trisodium phosphate and 30 milliliters laundry detergent to 1 liter of water or cleaned with a proprietary masonry cleaning agent specifically recommended for the color and texture by the clay products manufacturer. The solution shall be applied with stiff fiber brushes, followed immediately by thorough rinsing with clean water. Proprietary cleaning agents shall be used in conformance with the cleaning product manufacturer's printed recommendations. Efflorescence shall be removed in conformance with the brick manufacturer's recommendations.

3.21 BEARING PLATES

Bearing plates for beams, joists, joist girders and similar structural members shall be set to the proper line and elevation with damp-pack bedding mortar, except where non-shrink grout is indicated. Bedding mortar and non-shrink grout shall be as specified in Section 03300CAST-IN-PLACE STRUCTURAL CONCRETE.

3.22 PROTECTION

Facing materials shall be protected against staining. Top of walls shall be covered with nonstaining waterproof covering or membrane when work is not in progress. Covering of the top of the unfinished walls shall continue until the wall is waterproofed with a complete roof or parapet system. Covering shall extend a minimum of 600 mm down on each side of the wall and shall be held securely in place. Before starting or resuming, top surface of masonry in place shall be cleaned of loose mortar and foreign material.

3.23 TEST REPORTS

3.23.1 Field Testing of Mortar

At least three specimens of mortar shall be taken each day. A layer of mortar 13 to 16 mm thick shall be spread on the masonry units and allowed

to stand for one minute. The specimens shall then be prepared and tested for compressive strength in accordance with ASTM C 780.

3.23.2 Field Testing of Grout

Field sampling and testing of grout shall be in accordance with the applicable provisions of ASTM C 1019. A minimum of three specimens of grout per day shall be sampled and tested. Each specimen shall have a minimum ultimate compressive strength of 13.8 MPa at 28 days.

3.23.3 Efflorescence Test

Brick which will be exposed to weathering shall be tested for efflorescence. Tests shall be scheduled far enough in advance of starting masonry work to permit retesting if necessary. Sampling and testing shall conform to the applicable provisions of ASTM C 67. Units meeting the definition of "effloresced" will be subject to rejection.

3.23.4 Sealer

All exposed masonry (brick and split-face cmu) shall be sealed with "Prime A Pell 200" by Chemprobe after all masonry is installed and cleaned. Coverage Rate shall be determined by Technical Representative of product and the Sample panel constructed on site. Refer to 09900 and 09915 for additional specifications.

-- End of Section --

SECTION 06410

CUSTOM CASEWORK
Amendment 000409/2000

PART 1 GENERAL

1.1 REFERENCES

The publications listed below form a part of this specification to the extent referenced. The publications are referred to in the text by basic designation only.

ARCHITECTURAL WOODWORK INSTITUTE (AWI)

AWI Qual Stds	(1997) Architectural Woodwork Quality Standards

BUILDERS HARDWARE MANUFACTURERS ASSOCIATION (BHMA)

BHMA A156.9	(1994) Cabinet Hardware
BHMA A156.18	(1993) Materials and Finishes

HARDWOOD PLYWOOD & VENEER ASSOCIATION (HPVA)

HPVA HP-1	(1994) American National Standard for Hardwood and Decorative Plywood

NATIONAL ELECTRICAL MANUFACTURERS ASSOCIATION (NEMA)

NEMA LD 3	(1995) High-Pressure Decorative Laminates

1.2 SUBMITTALS

Government approval is required for submittals with a "G" designation; submittals not having a "G" designation are for information only. When used, a designation following the "G" designation identifies the office that will review the submittal for the Government. The following shall be submitted in accordance with Section 01330 SUBMITTAL PROCEDURES:

SD-02 Shop Drawings

Custom Casework

Drawings shall show each type of casework, counters, cabinets, and related items, and shall clearly indicate the complete layout of the cabinets and accessories, and pertinent details of construction, fabrication and attachments.

SD-03 Product Data

Custom Casework

Manufacturer's catalog data, including standard color charts.

SD-04 Samples

Custom Casework; G, .

Plastic Laminate; G, .

Samples shall be submitted with the drawings. In lieu of individual samples, complete minimum size casework may be furnished as samples. Mock-up units are not acceptable. Samples shall include the following items:

a. Door and drawer fronts - one of each type, with hardware mounted.

b. Countertop and backsplash - one section, 102 mm wide, containing both.

c. Plastic laminate color samples, 75 by 152 mm .

SD-08 Manufacturer's Instructions

Custom Casework

Manufacturer's instructions shall include assembling, installation, finishing, and maintenance instructions.

1.3 DELIVERY, HANDLING, AND STORAGE

The Contractor shall protect materials from damage during delivery, when stored, and during construction. Damaged and defective materials shall be removed and replaced with new. Cabinet work shall be constructed, or delivered and brought into the building, only after the building has dried out, following the installation of wet materials, and when there is no danger of incurring excessive moisture so as to cause damage to materials. Mill-fabricated cabinets and casework, scheduled to receive a stain finish, shall be delivered to the project with one coat of an approved stain-sealer of a type compatible with the final finish.

PART 2 PRODUCTS

2.1 GENERAL REQUIREMENTS

Casework, including cabinets and counters, shall be reveal overlay design and shall be custom built, either at a mill or in-place in the building. Casework shall be premium grade, and unless otherwise specified, shall be built to the quality standards specified in AWI Qual Stds for cabinets and casework. Design shall be as specified and as indicated on the drawings.

2.1.1 Plywood

Hardwood plywood shall meet or exceed the requirements of HPVA HP-1. Plywood shall be of specified thickness with face-veneer on both sides of wood plys. Veneers shall meet or exceed the requirements of HPVA HP-1, Grade A, and be Type II bonded to the core with water-resistant adhesives. Face veneer for stained finish shall be red oak species, rotary cut or plain sliced with no sapwood allowed. Plywood to receive plastic laminate or painted finish shall be any species, sound grade. Exposed edges shall

receive factory-applied edge banding, same species as the face veneer. Plywood shall be polish sanded, sealed, and ready for finishing.

2.1.2 Construction

Construction shall be plumb, square, and true; accurately milled and fabricated to details with clean-cut profiles and lines. Accurately size the cabinets, counters, and casework to the indicated dimensions. Surfaces shall be flat, true, free of planer marks or other mars, and smoothly sanded. Select best wood pieces with most uniform grain and color for exposed surfaces. Where possible, conceal fastenings; where not possible, locate fastenings in inconspicuous places. Where nailing is permitted on exterior exposed faces, conceal nailheads. Do not fasten with exposed nails in hardwood. Mortise, tenon, spline, house, joint, block, nail, screw, glue, or bolt together, as approved, in manner to provide rigidity, to avoid swelling or shrinking, and to insure work to remain in place without warping, splitting, and opening of joints. Furnish and securely install cleats, nailers, strips, blocking, hangers, anchors, moldings, and the like, required to neatly and securely install cabinets, counters, and casework.

2.1.2.1 Framing

Cabinets and counters, constructed in place shall have frame fronts and solid ends, or frame construction throughout. Frame member shall be 20 by 38 mm kiln-dried hardwood, mortised and tenoned, dovetailed or doweled, and glued together. Top and bottom corners shall be braced with hardwood blocks that are glued with water-resistant glue and nailed in place. Continuous back panels shall be provided for all mill-fabricated counters, cabinets, shelving, and casework. Back panels shall be 6.4 mm minimum thick hardwood plywood, sound grade, or 3.2 mm tempered hardboard when painted or concealed. Exposed or semi-exposed backs shall be hardwood plywood of the same veneer as the face of the cabinet. Bottoms of cabinets shall be minimum 10 mm thick plywood good grade and shall be braced with wood members glued in place. Cabinet ends shall be 16 mm thick medium density particleboard core with hardwood veneers. Shelves shall be fully adjustable and shall be minimum 16 mm thick particleboard.

2.1.2.2 Counter and Cabinet Bases

Bases shall be constructed of 50 mm thick wood framing, members cut to fit, with toe space of the indicated height and depth. Cross rails shall be provided at cabinet ends, points of concentrated loads, and intervals not to exceed 610 mm .

2.1.2.3 Doors and Drawer Fronts

Door design shall be framed inset hardwood raised panels except Personal Storage Cubicles in the Soldier Community Building which shall be solid flush face. Flush doors shall be hardwood plywood **, faced with plastic laminate and (am#4)** with **(____ am#4)** solid hardwood edges**, stained (am#4)**. Drawer fronts shall be at least 20 mm thick solid wood to match cabinet. Panel doors and drawer fronts shall be routed on the back side to act as pulls. Drawers shall be constructed of economy grade 14mm solid wood for sides, sub-front and backs with plywood bottoms.

2.1.2.4 Countertops and Backsplashes

Countertops and backsplashes shall be constructed of plywood, Grade B-D or

better, and covered with shop-applied plastic laminate. Countertops shall be at least 20 mm thick. Backsplash shall be plywood, Grade B-D or better, 20 mm thick. Unless otherwise indicated, backsplashes shall be not less than 90 mm high.

2.1.3 Fasteners and Adhesives

2.1.3.1 Nails

Nails shall be steel casing nails with flat countersunk cupped head and diamond point.

2.1.3.2 Adhesives

Adhesives shall be moisture- and mold-resistant. Adhesive shall also be contact type for adhering plastic laminate sheets.

2.1.3.3 Wood Screws

Wood screws shall be carbon steel or brass. Wood screws exposed to view shall be brass with an oval head with cross recess drive.

2.2 CABINET HARDWARE

Cabinet finish hardware shall conform to the types and styles of BHMA A156.9. Screws and attachments shall be finished to match the hardware item. Finishes shall be in accordance with BHMA A156.18 . Finishes shall be (zinc plated and dichromate sealed), 645 (bright nickel plated, clear coated), 646 satin nickel plated, dlear coated), or 652 (satin chrome plated over nickel) as specified,for hardware items having a base metal of steel, 626 (satin chrome plated over nickel) for hardware items having a base metal of bronze or brass, 628 (satin aluminum, clear anodized) for hardware items having a base metal of aluminum, and 630 (satin stainless steel)for items having a base metal of stainless steel.

2.2.1 Shelf Supports

2.2.1.1 Flush-Applied Supports

Flush-applied (mortised), adjustable shelf standards shall be B84071, wrought steel, 604 finish with 13 mm increment adjustment slots and with provision for screw fastening 152 mm on vertical center.

2.2.1.2 Shelf Rests

Shelf rests shall be Type B84081, wrought steel 604 finish. Rests shall have a minimum projection of 20 mm and a minimum width of 14 mm .

2.2.2 Cabinet Hinges

Cabinet hinges shall be wrought steel or brass, designated size and finish and shall conform to BHMA A156.9, as follows:

Concealed hinges for raised panel doors shall be B01501. Quality and size of hinges for individual doors shall be as recommended by the hinge

manufacturer for the particular door size and weight. Finish shall be 652 or 626, depending upon base metal selected.

Continuous hinges for Personal Storage Cubical doors shall be B81491, wrought steel, 645 finish, 1.5 mm (0.60 inch) thick with 3.0 mm (0.120 inch) steel pin, countersunk screw holes 50 mm (2 inches) on center, width when open, 50 mm (2 inches).

2.2.3 Cabinet Catches

Cabinet catches shall be B43141, magnetic catches, aluminum case, minimum 1.8-kg pull.

2.2.4 Pulls

Door and drawer pulls shall be routed into the back of door panels and drawer fronts. Pulls for Personal Storage Cubicles shall be cast brass B12011, wire type with separate round bases, finish 626, 100 mm (4 inch) centers (unless otherwise indicated), screw attached from inside of door or drawer.

2.2.5 Drawer Slides

Drawer slides shall be B85051, 604 finish, ball bearing full extension drawer slides for attachment to each side of drawer. Synthetic rubber stops shall be provided at striking points.

2.3 PLASTIC LAMINATES

2.3.1 CounterTops, Edges, and Backsplashes

Countertop surface, edge, and backsplash shall be covered with high-pressure plastic laminate, general-purpose type, conforming to NEMA LD 3, Type GP50. Color, pattern, and finish shall be as indicated in Section 09915 COLOR SCHEDULE.

2.3.2 Adhesives

Adhesives for plastic-laminate sheets shall be phenol-resorcinol and melamine cinforming to FS MMM-A-181 or contact adhesive conforming to FS-MMM-A-130, Type I.

PART 3 EXECUTION

3.1 GENERAL

Casework shall be installed only when temperature and humidity conditions approximate the interior conditions that will exist when the building is occupied. The relative humidity in the building at the time of installation of materials shall be within the limits recommended by the manufacturer. Casework shall be installed level, plumb, and true to line, and shall be attached to the walls or floors with concealed toggle bolts. Countertops, accessories, and hardware shall be installed as indicated. Closure and filler strips and finish moldings shall be provided as required. Make neat, close-fitting cut-outs for indicated sinks, plumbing, and other items projecting through tops. Carefully locate cut-outs for pipes so that edges of holes will be covered by escutcheons. The inner edge of all cut-outs shall be painted with a coat of semigloss enamel

paint; sink flanges shall be set in a bed of sealants. Prior to final acceptance, the Contractor shall aline all doors, adjust all hardware, and leave cabinets in a clean and neat condition.

3.1.1 Counters

Conceal fastenings where practicable, fit the counter neatly, install in a rigid and substantial manner, and scribe to adjoining surfaces. Provide counter sections in the longest lengths practicable; keep joints in tops to a minimum; and where joints are necessary, provide tight hairline joints drawn up with concealed-type heavy pull-up bolts. Glue joints with water-resistant glue and, in addition, make rigid and substantial with screws, bolts, or other approved fastenings.

3.1.2 Nailing

Exposed nailing shall be countersunk finishing nails; the countersunk holes shall be filled with a matching wood filler or putty. Staples shall not be permitted in exposed cabinet or casework.

3.1.3 Finishing

Exposed wood surfaces shall be machine sanded at the mill to the specified standard and then shall receive a final sanding at the site to a smooth clean finish, free of machine or tool marks, abrasions, raised grain, or similar imperfections.

3.2 APPLICATION OF PLASTIC LAMINATE

Plastic laminate shall be a continuous sheet of the longest length practicable. Joints in the surface sheeting shall be tight and flush, and held to a practical minimum number. Apply with contact type adhesive, type as recommended by the manufacturer of the laminate, applied to both surfaces. The edging and trim shall consist of strips of laminate cut and fitted to all exposed edges with approved contact adhesive.

-- End of Section --

SECTION 08700

BUILDERS' HARDWARE
03/96Amendment 0004

PART 1 GENERAL

1.1 REFERENCES

The publications listed below form a part of this specification to the extent referenced. The publications are referred to in the text by basic designation only.

AMERICAN SOCIETY FOR TESTING AND MATERIALS (ASTM)

ASTM E 283	(1991) Determining the Rate of Air Leakage Through Exterior Windows, Curtain Walls and Doors Under Specified Pressure Differences Across the Specimen

BUILDERS HARDWARE MANUFACTURERS ASSOCIATION (BHMA)

BHMA L & R Directory	(Effective thru Jun 1999) Directory of Certified Locks & Latches
BHMA Closer Directory	(Effective thru Jul (1999) Directory of Certified Door Closers
BHMA Exit Devices Directory	(Effective thru Aug 1998) Directory of Certified Exit Devices
BHMA A156.1	(1997) Butts and Hinges
BHMA A156.2	(1996) Bored and Preassembled Locks and Latches
BHMA A156.3	(1994) Exit Devices
BHMA A156.4	(1992) Door Controls - Closers
BHMA A156.5	(1992) Auxiliary Locks & Associated Products
BHMA A156.6	(1994) Architectural Door Trim
BHMA A156.7	(1997) Template Hinge Dimensions
BHMA A156.8	(1994) Door Controls - Overhead Stops and Holders

BHMA A156.16	(1989) Auxiliary Hardware
BHMA A156.18	(1993) Materials and Finishes
BHMA A156.21	(1996) Thresholds

DOOR AND HARDWARE INSTITUTE (DHI)

DHI Keying Systems	(1989) Keying Systems and Nomenclature
DHI Locations for CSD	(1997) Recommended Locations for Builders' Hardware for Custom Steel Doors and Frames
DHI Locations for SSD	(1990) Recommended Locations for Architectural Hardware for Standard Steel Doors and Frames
DHI ANSI/DHI A115.1G	(1994) Installation Guide for Doors and Hardware

NATIONAL FIRE PROTECTION ASSOCIATION (NFPA)

NFPA 80	(1999) Fire Doors and Fire Windows
NFPA 101	(1997; Errata 97-1; TIA-97-1) Life Safety Code
NFPA 105	(1999) Installation of Smoke-Control Door Assemblies

1.2 SUBMITTALS

Government approval is required for submittals with a "G" designation; submittals not having a "G" designation are for information only. When used, a designation following the "G" designation identifies the office that will review the submittal for the Government. The following shall be submitted in accordance with Section 01330 SUBMITTAL PROCEDURES:

SD-02 Shop Drawings

Exit Devices; G
Drawings; G

Detail drawings for hardware devices for computerized keying systems, magnetic cards, keyless push button access control systems, and other electrical hardware devices showing complete

wiring and schematic diagrams and other details required to demonstrate proper function of units.

Detail drawings for hardware devices for computerized keying systems, magnetic cards, keyless push button access control systems, and other electrical hardware devices showing complete wiring and schematic diagrams and other details required to demonstrate proper function of units.

SD-03 Product Data

Exit Device Accessories; G

Manufacturer's descriptive data, technical literature, catalog cuts, and installation instructions. Spare parts data for locksets, exit devices, closers, electric locks, electric strikes, electro-magnetic closer holder release devices, and electric exit devices, after approval of the detail drawings, and not later than 3 month(s) prior to the date of beneficial occupancy. The data shall include a complete list of parts and supplies, with current unit prices and source of supply.

Hardware Schedule; G

Hardware schedule listing all items to be furnished. The schedule shall include for each item: the quantities; manufacturer's name and catalog numbers; the ANSI number specified, sizes; detail information or catalog cuts; finishes; door and frame size and materials; location and hardware set identification cross-references to drawings; lock trim material thicknesses; lock trim material evaluation test results; corresponding reference standard type number or function number from manufacturer's catalog if not covered by ANSI or BHMA; and list of abbreviations and template numbers.

Keying; G

Keying schedule developed in accordance with DHI Keying Systems, after the keying meeting with the user.

SD-04 Samples

Locksets; G.

Furnish a sample of the locksets to be furnished this project. Notify the Contracting Officer and base personnel for a meeting demonstrating that the locksets to be furnished are fully compatible with the existing keying system. An existing base core, cylinder, and key will be fitted to the sample lockset. The core and cylinder shall fit the lockset without the use of adaptors and without play. The key shall easily lock and unlock the lockset without binding or other difficulties. Control key shall easily remove and install cores.

SD-07 Certificates

Hardware and Accessories; **G**

The hardware manufacturer's certificates of compliance stating

that the supplied material or hardware item meets specified requirements. Each certificate shall be signed by an official authorized to certify in behalf of the product manufacturer and shall identify quantity and date or dates of shipment or delivery to which the certificates apply. A statement that the proposed hardware items appear in BHMA L & R Directory, BHMA Closer Directory and BHMA Exit Devices Directory directories of certified products may be submitted in lieu of certificates.

Furnish a separate certificate of compliance attesting that hardware items comform to the Section 00700 Contract clauses pertaining to the Buy American Act.

1.3 PREDELIVERY CONFERENCE

Upon approval of the Hardware Schedule, the construction Contractor shall arrange a conference with the hardware supplier, Contracting Officer and the using agency to determine keying system requirements. Location of the key control storage system, set-up and key identification labeling will also be determined.

1.4 DELIVERY, STORAGE, AND HANDLING

Hardware shall be delivered to the project site in the manufacturer's original packages. Each article of hardware shall be individually packaged in the manufacturer's standard commercial carton or container, and shall be properly marked or labeled to be readily identifiable with the approved hardware schedule. Each change key shall be tagged or otherwise identified with the door for which its cylinder is intended. Where double cylinder functions are used or where it is not obvious which is the key side of a door, appropriate instructions shall be included with the lock and on the hardware schedule. Manufacturer's printed installation instructions, fasteners, and special tools shall be included in each package.

1.5 SPECIAL TOOLS

Special tools, such as those supplied by the manufacturer, unique wrenches, and dogging keys, shall be provided as required to adjust hardware items.

1.6 WARRANTY

Manufacturer's standard performance guarantees or warranties that extend beyond a one year period shall be provided.

1.7 OPERATION AND MAINTENANCE MANUALS

Six complete copies of maintenance instructions listing routine maintenance procedures, possible breakdowns and repairs, and troubleshooting guides shall be provided. The instructions for electric locks, electric strikes, electro-magnetic closer holder release devices, and electric exit devices shall include simplified diagrams as installed.

PART 2 PRODUCTS

2.1 GENERAL HARDWARE REQUIREMENTS

Hardware shall conform to the requirements specified herein and the HARDWARE SETS listing at the end of this section. Hardware set numbers correspond to the set numbers shown on the drawings.

2.2 TEMPLATES

Requirements for hardware to be mounted on metal doors or metal frames shall be coordinated between hardware manufacturer and door or frame manufacturer by use of templates and other information to establish location, reinforcement required, size of holes, and similar details. Templates of hinges shall conform to BHMA A156.7.

2.3 HINGES

Hinges shall conform to BHMA A156.1. Hinges used on metal doors and frames shall also conform to BHMA A156.7. Except as otherwise specified, hinge sizes shall conform to the hinge manufacturer's printed recommendations.

2.3.1 Hinges for Reverse Bevel Doors with Locks

Hinges for reverse bevel doors with locks shall have pins that are made nonremovable by means such as a set screw in the barrel, or safety stud, when the door is in the closed position.

2.3.2 Contractor's Option

Hinges with antifriction bearings may be furnished in lieu of ball bearing hinges, except where prohibited for fire doors by the requirements of NFPA 80.

2.3.3 Pivot Hinges

Pivot hinges shall conform to BHMA A156.4.

2.4 LOCKS AND LATCHES

To the maximum extent possible, locksets, latchsets and deadlocks, and all components thereof, including cylinders and removable cores, shall be the products of a single manufacturer. Lock fronts for double-acting doors shall be rounded. Strikes for wood frames and pairs of wood doors shall be furnished with wrought boxes.

2.4.1 Bored Lock and Latchsets

Bored lock, latchsets, and strikes shall be series 4000 and shall conform to BHMA A156.2, Grade 1. Bored type locks and latches for doors 35 mm thick and over shall have adjustable bevel fronts or otherwise conform to the shape of the door.

2.4.2 Auxiliary Locks and Associated Products

Bored and mortise dead locks and dead latches, narrow style dead locks and dead latches, rim latches, dead latches, and dead bolts shall conform to BHMA A156.5. Strike boxes shall be furnished with dead bolt and latch strikes for Grade 1.

2.4.3 Lock Cylinders (Rim and Bored)

Lock cylinders shall comply with BHMA A156.5. Lock cylinder shall have not less than seven pins. Cylinders shall have key removable type cores. A master keying system shall be provided. An extension of the existing keying system shall be provided. Construction interchangeable cores shall

be provided. Disassembly of knob or lockset shall not be required to remove core from lockset. All locksets, lockable exit devices, and padlocks shall accept same interchangeable cores.

2.4.4 Lock Trim

Lock trim shall be cast, forged, or heavy wrought construction of commercial plain design. In addition to meeting the test requirement of BHMA A156.2 , knobs, lever handles, roses, and escutcheons shall be 1.27 mm thick, if unreinforced. If reinforced, the outer shell shall be 0.89 mm thick and the combined thickness shall be 1.78 mm except that knob shanks shall be 1.52 mm thick. Knob diameter shall be 54 to 57 mm. Lever handles shall be of plain design with ends returned to no more than 10 mm from the door face.

2.5 EXIT DEVICES AND EXIT DEVICE ACCESSORIES

Exit devices and exit device accessories shall conform to BHMA A156.3, Grade 1.

2.5.1 Exit Devices and Auxiliary Items

Trim shall be of wrought construction and commercial plain design with straight, beveled, or smoothly rounded sides, corners, and edges. Adjustable strikes shall be provided for rim type and vertical rod devices. Open back strikes shall be provided for pairs of doors with mortise and vertical rod devices; except open back strikes shall be used on labeled doors only where specifically provided for in the published listings. Touch bars shall be provided in lieu of conventional crossbars and arms. Escutcheons shall be provided not less than 175 by 55 mm. Escutcheons shall be cut to suit cylinders and operating trim.

2.5.2 Door Coordinator

Door coordinator with carry bar shall be Type 21 and shall be provided for each pair of doors equipped with an overlapping astragal. The coordinator may be mechanically operated and shall be capable of holding the active door of a pair open until the inactive door has preceded it in the closing cycle. When used as fire exit hardware, the coordinator and carry bar shall be listed or labeled by a nationally recognized independent testing laboratory.

2.6 KEYING

Locks shall be keyed in sets or subsets as scheduled. Locks shall be furnished with the manufacturer's standard construction key system. Key Barracks Building so that either sleeping/living room door key will open exterior door B1, but will only open its' respective sleeping room door B2a or B2b. Change keys for locks shall be stamped with change number and the inscription "U.S. Property - Do Not Duplicate." Keys shall be supplied as follows:

Locks:	3 change keys each lock.
Master keyed sets:	3 keys each set.
Construction keys:	5 total.
Blank keys:	200 total.

The keys shall be furnished to the Contracting Officer arranged in a container for key control system storage in sets or subsets as scheduled. Permanent keys shall be sent by the lock manufacturer directly to the Contracting Officer by registered mail or other approved means.

2.7 DOOR CLOSING DEVICES

Door closing devices shall conform to BHMA A156.4, Grade 1. Closing devices shall be products of one manufacturer for each type specified. The opening resistance of closing devices shall not exceed 67 N applied at the latch stile or exceed 22 N where low opening resistance is scheduled.

2.7.1 Surface Type Closers

Surface type closers shall be Grade 1, Series C02000 Full Cover with options PT-4H, Size 1 or 2 through Size 6, and PT-4D with back check position valve. Except as otherwise specified, sizes shall conform to the manufacturer's published recommendations. Closers for outswinging exterior doors shall have parallel arms or shall be top jamb mounted. Closers for doors close to a wall shall be of narrow projection so as not to strike the wall at the 90-degree open position. Closers on doors accessible to the physically handicapped shall have the closing force set for a push-pull of 2.27 kg (5 pounds) applied at the knob or handle for interior doors; for exterior doors, set to the minimum required to relatch the door.

2.8 DOOR CONTROLS - OVERHEAD HOLDERS

Door controls - overhead holders shall conform to BHMA A156.8.

2.9 ARCHITECTURAL DOOR TRIM

Architectural door trim shall conform to BHMA A156.6.

2.9.1 Door Protection Plates

2.9.1.1 Kick Plates

Kick plates shall be Type J102 stainless steel. Width of plates shall be 50 mm less than door width for single doors and 25 mm less for pairs of doors. Height shall be 400 mm, except where the bottom rail is less than 250 mm the plate shall extend to within 13 mm of the panel mold or glass bead. Edges of plates shall be beveled.

2.9.1.2 Mop Plates

Mop plates shall be Type J103 stainless steel. Width of plates shall be 50 mm less than door width for single doors and 25 mm less for pairs of doors. The height shall be 100 mm.
Edges of plates shall be beveled.

2.9.2 Push Plates

2.9.2.1 Flat Plates

Flat plates shall be Type J301 1.27 mm thick stainless steel Edges of plates shall be beveled.

2.9.3 Door Pulls and Push/Pull Units

2.9.3.1 Door Pulls

Door pulls shall be Category J400 stainless steel of plain modern design. Pulls for hollow metal, mineral core wood or kalamein doors shall be Type J405 thru-bolted to Type J301 flat push plates.

2.9.4 Push and Pull Bars

Push and pull bars shall be Category J500,aluminum . Edges of mounting plates shall be beveled.

2.10 AUXILIARY HARDWARE

Auxiliary hardware, consisting of door holders, shall conform to BHMA A156.16. Lever extension flush bolts shall be Type L14081.Dust-proof strikes shall be Type L04011 for doors that are not fire rated. Dust-proof strikes shall be Type L04021 for fire rated doors. Other auxiliary hardware of the types listed below, shall conform to BHMA A156.16.

2.11 MISCELLANEOUS

2.11.1 Metal Thresholds

Thresholds shall conform to BHMA A156.21. Thresholds for exterior doors shall be extruded aluminum of the type indicated and shall provide proper clearance and an effective seal with specified weather stripping. Latching thresholds shall be of such height that the bottom of the door shall be 3 mm over the tread of the threshold and 3 mm below the top of the stop. Where required, thresholds shall be modified to receive projecting bolts of flush bolts exit devices. Thresholds for doors accessible to the handicapped shall be beveled with slopes not exceeding 1:2 and with heights not exceeding 13 mm. Air leakage rate of weatherstripping shall not exceed 0.775 liters per second per lineal meter of crack when tested in accordance with ASTM E 283 at standard test conditions.

2.11.2 Rain Drips

Extruded aluminum, not less than 1.78 mm thick, clear anodized. Door sill rain drips shall be 38 mm to 44 mm high by 16 mm projection. Overhead rain drips shall be approximately 38 mm high by 63 mm projection and shall extend 50 mm on either side of the door opening width.

2.11.3 Aluminum Housed Type Weatherseals

Weatherseals of the type indicated shall consist of extruded aluminum retainers not less than 1.78 mm wall thickness with vinyl, neoprene, silicone rubber, polyurethane or vinyl brush inserts. Aluminum shall be clear (natural) anodized. Weatherseal material shall be of an industrial/commercial grade. Seals shall remain functional through all weather and temperature conditions. Air leakage rate of weatherstripping shall not exceed 0.775 liters per second per lineal meter of crack when tested in accordance with ASTM E 283 at standard test conditions.

2.11.4 Key Control Storage System

Key control storage system shall conform to BHMA A156.5, Type E8331,

capacity 150, and shall be properly labeled for key identification. Set up, identification labeling and location of the key control storage shall be as directed at the Predelivery Conference. This shall apply to the Soldier Community Building, Barracks, and the Company Operations Building. The Energy Plant shall have a Key control storage system that conforms to BHAM A156.5, Type E8361, capacity 14, and shall be properly labeled for key identification. Set up, identification labeling and location of the control storage shall be as directed at the Predelivery Conference.

2.11.5 Door Stops

Wall stops, floor stops and combination stop and holders shall conform to BHMA A156.16.

2.12 FASTENINGS

Fastenings of proper type, size, quantity, and finish shall be supplied with each article of hardware. Machine screws and expansion shields shall be used for attaching hardware to concrete or masonry. Fastenings exposed to the weather in the finished work shall be of brass, bronze, or stainless steel. Sex bolts, through bolts, or machine screws and grommet nuts, where used on reverse-bevel exterior doors equipped with half-surface or full-surface hinges, shall employ one-way screws or other approved tamperproof screws. Screws for the jamb leaf of half-mortise and full-surface hinges attached to structural steel frames shall be one-way or other approved tamperproof type.

2.13 FINISHES

Unless otherwise specified, finishes shall conform to those identified in BHMA A156.18. Where painting of primed surfaces is required, painting is specified in Section 09900 PAINTING, GENERAL.

2.14 HARDWARE FOR FIRE DOORS

Hardware for fire doors shall conform to the requirements of NFPA 80and NFPA 101.

PART 3 EXECUTION

3.1 APPLICATION

Hardware shall be located in accordance with DHI Locations for CSD and DHI Locations for SSD, except that deadlocks shall be mounted 1220 mm above finish floor. When approved, slight variations in locations or dimensions will be permitted. Application shall be in accordance with DHI ANSI/DHI A115.1G. Door control devices for exterior doors such as closers and holders, shall be attached to doors with thru bolts and nuts or sex bolts. Alternate fastening methods may be approved by the Contracting Officer when manufacturers' documentation is submitted to verify that the fastening devices and door reinforcements are adequate to resist wind induced stresses. Electric hardware items and access control devices shall be installed in accordance with manufacturer's printed installation procedures.

3.1.1 Hardware for Fire Doors and Smoke-Control Door Assemblies

Hardware for fire doors shall be installed in accordance with the requirements of NFPA 80. Exit devices installed on fire doors shall have a visible label bearing the marking "Fire Exit Hardware". Other hardware

installed on fire doors, such as locksets, closers, and hinges shall have a visible label or stamp indicating that the hardware items have been approved by an approved testing agency for installation on fire-rated doors. Hardware for smoke-control door assemblies shall be installed in accordance with NFPA 105.

3.1.2 Door-Closing Devices

Door-closing devices shall be installed and adjusted in accordance with the templates and printed instructions supplied by the manufacturer of the devices. Insofar as practicable, doors opening to or from halls and corridors shall have the closer mounted on the room side of the door.

3.1.3 Key Control Storage Systems

Key control storage system shall be furnished to the Contracting Officer arranged in a container suitable for key control system storage in sets or subsets as scheduled..

3.1.4 Kick Plates and Mop Plates

Kick plates shall be installed on the push side of single-acting doors and on both sides of double-acting doors. Mop plates shall be installed on the pull side of the single acting doors.

3.1.5 Auxiliary Hardware

Lever extension flush bolts shall be installed at the top and bottom of the inactive leaf of pairs of doors. The bottom bolt shall operate into a dust-proof floor strike or threshold.

3.1.6 Thresholds

Thresholds shall be secured with a minimum of three fasteners per single door width and six fasteners per double door width with a maximum spacing of 300 mm. Exterior thresholds shall be installed in a bed of sealant with expansion anchors and stainless steel screws, except that bronze or anodized bronze thresholds shall be installed with expansion anchors with brass screws. Minimum screw size shall be No. 10 length, dependent on job conditions, with a minimum of 19 mm thread engagement into the floor or anchoring device used.Thresholds shall have ends scribed neately to jambs

3.1.7 Rain Drips

Door sill rain drips shall align with the bottom edge of the door. Overhead rain drips shall align with bottom edge of door frame rabbet. Drips shall be set in sealant and fastened with stainless steel screws.

3.1.8 Weatherseals

Weatherseals shall be located as indicated, snug to door face and fastened in place with color matched metal screws after door and frames have been finish painted. Screw spacing shall be as recommended by manufacturer.

3.1.9 Gasketing

Gasketing shall be installed at the inside edge of the hinge and head and latch sides of door frame. Frames shall be toleranced for a 3 mm clearance between door and frame. Frames shall be treated with tape primer

prior to installation.

3.2 OPERATIONAL TESTS

Prior to acceptance of any electrical hardware system, an operational test shall be performed to determine if devices are operating as intended by the specifications. Wiring shall be tested for correct voltage, current carrying capacity, and proper grounding. Stray voltages in lock wiring shall be eliminated to prevent locking devices from releasing in critical situations.

3.3 FIELD QUALITY CONTROL

Supplier shall inspect the completed installation and certify that the hardware has been furnished and installed in accordance with the manufacturers' instructions and as specified. The inspection report shall identify any malfunctioning items and recommend adjustment or replacement as appropriate.

3.4 HARDWARE SETS

SOLDIER COMMUNITY BUILDING

AHW-1 Door no. A01, A24, A25, A26

2 sets	Pivots, C07121, by door manufacturer x finish to match door
2 ea.	Intermediate pivot, C07321, by door manufacturer x finish to match door
2 ea.	Exit devices, Type 2, Function 08 - Grade 1, by door manufacturer x finish to match door
2 ea.	Pull bars, J502, by door manufacturer x finish to match door
2 ea.	Closers, C72041, by door manufacturer x 694
2 ea.	Stops, L11371 x 626, with stud and expansion shield
1 set	Weatherstripping at head, jambs and meeting stiles x 628
1 ea.	Threshold, J33100 x 628

AHW-2 Door no. A02

2 sets	Pivots, C07121, by door manufacturer x finish to match door
2 ea.	Intermediate pivot, C07321, by door manufacturer x finish to match door
2 ea.	Pull bars, J502, by door manufacturer x finish to match door
2 ea.	Push bars, J501, by door manufacturer x finish to match door
2 ea.	Closers, C72041 by door manufacturer x 694
2 ea.	Stops, L11371 x 626 with stud and expansion shield

AHW-3 Door no. A03

1 set	Pivot, C07121 by door manufacturer x finish to match door
1 ea.	Intermediate pivot, C07321 by door manufacturer x finish to match door
1 ea.	Exit device, Type 2, Function 08 - Grade 1 by door manufacturer x finish to match door

1 ea.	Pull bar, J502, by door manufacturer x finish to match door
1 ea.	Closer, C72041 by door manufacturer x 694
1 ea.	Stop, L11371 x 626 with stud and expansion shield
1 set	Weatherstripping at head and jambs x 628
1 ea.	Threshold, J33100 x 628

AHW-4 Door no. A04

1 set	Pivots, C07121 by door manufacturer x finish to match door
1 ea.	Intermediate pivot, C07321 by door manufacturer x finish to match door
1 ea.	Pull bar, J502, by door manufacturer x finish to match door
1 ea.	Push bar, J501 by door manufacturer x finish to match door
1 ea.	Closer, C72041 by door manufacturer x 694
1 ea.	Stop, L11371 x 626 with stud and expansion shield

AHW-5 Door no. A05, A06, A19, A20, A21

1 set	Pivot, C07121, by door manufacturer x finish to match door
1 ea.	Intermediate pivot, C07321, by door manufacturer x finish to match door (For door A17 only)
1 ea.	Intermediate pivot, C07321, by door manufacturer x finish to match door (For door A05 only)
1 ea.	Lockset, F82 - Grade 1, by door manufacturer x 606 (lever)
1 ea.	Closer, C72041, by door manufacturer x 694
1 ea.	Stop, L11371 x 626, with stud and expansion shield

AHW-6 Door no. A07, A08

3 ea.	Hinges, A2111 x 606
1 ea.	Lockset, F82 - Grade 1 x 606 (lever)
1 ea.	Stop, L12141 x 626 with stud and expansion shield

AHW-7 Door no. A09 (Fire Rated)

3 ea.	Hinges, A8111 x 652
1 ea.	Lockset, F86 - Grade 1 x 626 (lever)
1 ea.	Closer, C72011, PT-4G x 689
1 ea.	Kickplate, J102 x 630
1 ea.	Stop, L11371 x 626 with stud and expansion shield

AHW-8 Door no. A10 (Dutch door)

4 ea.	Hinges, A2111 x 626
1 ea.	Lockset, F82 - Grade 1 x 626(lever) (for bottom portion of door)
1 ea.	Deadbolt, E0121 - Grade 1 x 626 (for top portion of door)
1 ea.	Surface bolt, L24151 x 626 (for top portion of door)
1 ea.	Stop, L12141 x 626 with stud and expansion shield

AHW-9 Door no. A11 (Fire Rated)

3 ea. Hinges, A8111 x 652
1 ea. Lockset, F82 - Grade 1 x 652 (lever)
1 ea. Closer, C72011, PT-4G x 689
1 ea. Kickplate, J102 x 630
1 ea. Stop, L11371 x 626 with stud and expansion shield

AHW-10 Door no. A12, A13, A14

3 ea. Hinges, A5111 x 630
1 ea. Lockset, F82- Grade 1 x 630 (lever)
1 ea. Closer, C72011, PT-4G x 689
1 ea. Kickplate, J102 x 630
1 set Weatherstripping at head and jambs
1 set Rain drip head and door bottom x 628
1 ea. Door sweep, R3C415 x 626
1 ea. Stop, L11371 x 626 with stud and expansion shield
1 ea. Threshold, J32180 x 628

AHW-11 Door no. A15

6 ea. Hinges, A2111 x 626
1 ea. Lockset, F86 - Grade 1 x 626 (lever)
1 ea. Self-latching extension flush bolt, Type 27 x 626
1 ea. Dust proof strike, L14011 x 626
2 ea. Overhead stops, C12541 x 626

AHW-12 Door no. A17, A18

8 ea. Hinges, A5111 x 630 (For door A13 only)
4 ea. Hinges, A5111 x 630 (For door A15 only)
1 ea. Lockset, F82 - Grade 1 x 630 (lever)
1 ea. Self-latching extension flush bolt, Type 27 x 626
1 ea. Dust proof strike, L14011 x 626
2 ea. Overhead stops, C12541 x 626
1 ea. Coordinator, Type 21A x 626
1 set Rain drip head, and door bottom x 628
1 set Weatherstripping at head, jambs, and meeting stiles x 628
1 ea. Threshold, J32180 x 628

AHW-13 **(____am#4) Not used (am#4)**

AHW-14 Door A22

1 set Pivot, C07121, by door manufacturer x finish to match door
1 ea. Intermediate pivot, C07321, by door manufacturer x finish to match door
1 ea. Lockset, F82 - Grade 1, by door manufacturer x 606 (lever)
1 ea. Closer, C72041, by door manufacturer x 694
1 ea. Stop, L11371 x 626 with stud and expansion shield

AHW-15 Door no. A23

3 ea.	Hinges, A2111 x 626
1 ea.	Lockset, F82 - Grade 1 x 626 (lever)
1 ea.	Closer, C72011 x 689
1 ea.	Kickplate, J102 x 630
1 ea.	Stop, L12141 x 626 with stud and expansion shield

BARRACKS

BHW-1 Door no. A

3 ea.	Hinges, A5111 x 630
1 ea.	Lockset, F82 - Grade 1 x 630 (Knobs)
1 ea.	Deadbolt, E1151 x 626
1 ea.	Closer, C72011 x 689
1 ea.	Kickplate, J102 x 630
1 ea.	Door viewer, L13221 x 612
1 set	Weatherstripping at head and jambs
1 ea.	Stop, L12161 x 626 with stud and expansion shield
1 ea.	Threshold, J32180 x 628
1 ea.	Door shoe, R3C505 X 628

BHW-2 Door no. B, C

3 ea.	Hinges, A8111 x 652
1 ea.	Lockset, F82 - Grade 1 x 626 (Knobs)
1 ea.	Door viewer, L13221 x 612
1 ea.	Stop, L12141 x 626 with stud and expansion shield

BHW-3 Door no. D

3 ea.	Hinges, A5111 x 630
1 ea.	Privacy lock, F76 - Grade 1 x 630 (Knobs)
1 ea.	Stop, L12141 x 626 with stud and expansion shield
1 ea.	Threshold, as detailed x marble

BHW-4 Door no. E

3 ea.	Hinges A5111 x 630
1 ea.	Privacy lock, F76 - Grade 1 x 630 (Knobs)
1 ea.	Threshold, as detailed x marble
1 ea.	Stop, L12141 x 626 with stud and expansion shield

BHW-5 Door no. F, G

3 ea.	Hinges, A8111 x 652 (Knobs)
1 ea.	Closet latch, F75 - Grade 1 x 652
1 ea.	Stop, L12141 x 626 with stud and expansion shield

BHW-6 Door no. H,J

3 ea. Hinges, A5111 x 630
1 ea. Lockset, F82 - Grade 1 x 630 (Knobs)
1 ea. Closer, C72021 x 689
1 ea. Kickplate, J102 x 630
1 ea. Overhead stop, C12541 x 626
1 ea. Threshold, J32180 x 628
1 ea. Door shoe, R3C505 X 628

COMPANY OPERATIONS BUILDING

CHW-1 Door no. C101

2 pr. Pivots, C07121, by door manufacturer x finish to match door
2 ea. Intermediate pivots, C07321 by door manufacturer x finish to match door
2 ea. Exit devices, Type 2, Function 08 - Grade 1 , by door Manufacturer x finish to match door (lever)
2 ea Pull bars, J502 by door manufacturer x factory finish to match doors
2 ea. Closers, C02021 by door manufacturer x finish to match door
2 ea. Stops, L11371 x 626 with stud and expansion shield
1 set Weatherstripping, at head, jambs, and meeting stiles
1 ea. Door sweep, R3C415 X 626
1 ea. Threshold, J33100 x 628

CHW-2 Door no. C102

2 pr. Pivots, C07121, by door manufacturer x finish to match door
2 ea. Intermediate pivots, C07321 by door manufacturer x finish to match door
2 ea. Pull bars, J502, by door manufacturer x finish to match door
2 ea. Push bars, J501, by door manufacturer x finish to match door
2 ea. Closers, C02021 by door manufacturer x finish to match door (Provide adapter as needed to allow for clearance of overhead door stop.)
2 ea. Stop, C11371 x 626 with stud and expansion shield

CHW-3 Door no. C103, C104, C105, C106, C107, C108, C109, C110, C120

3 ea. Hinges, A2111 x 626
1 ea. Lockset, F82 - Grade 1 x 626 (lever)
1 ea. Stop, L12141 x 626 with stud and expansion shield

CHW-4 Door no. C111,

3 ea. Hinges, A2111 x 626
1 ea. Lockset, F86 - Grade 1 x 626 (lever)

1 ea.	Overhead stop, C12541 x 626

CHW-5 Door no. C112,

6 ea.	Hinges, A2111 x 626
1 ea.	Lockset, F82- Grade 1 x 626 (lever)
1 ea.	Self-latching extension flush bolt, Type 27 x 626
1 ea.	Dust proof strike, L14011 x 626
2 ea.	Overhead stops, C12541 x 626
1 ea.	Coordinator, Type 21A x 626

CHW-6 Door no. C113

3 ea.	Hinges, A5111 x 630
1 ea.	Lockset, F86 - Grade 1 x 630 (lever)
1 ea.	Closer, C72021 x 689
1 ea.	Kickplate, J102 x 630
1 ea.	Mop plate, J103 x 630
1 ea.	Overhead stop, C12541 x 626
1 ea.	Threshold, as detailed x marble

CHW-7 Door no. C114, C115

3 ea.	Hinges, A5111 x 630
1 ea.	Lockset, F76 - Grade 1 x 630 (lever)
1 ea.	Closer, C72021 x 689
1 ea.	Garment hook, L12131 x 626
1 ea.	Kickplate, J102 x 630
1 ea.	Mop plate, J103 x 630
1 ea.	Overhead stop, C12541 x 626
1 ea.	Threshold, as detailed x marble

CHW-8 Door no. C116, C117

3 ea.	Hinges, A5111 x 630
1 ea.	Lockset, F82 - Grade 1 x 630 (lever)
2 ea.	Overhead stops, C12541 x 626
1 set	Weatherstripping, @ head, jambs, and meeting stiles
1 set	Rain drips @ head and door bottom
1 ea.	Door sweep, R3C415 X 626
1 ea.	Threshold, J14170 x 628

CHW-9 Door no. C118, C134, C135

6 ea.	Hinges, A5111 x 630
1 ea.	Lockset, F82- Grade 1 x 626 (lever)
1 ea.	Self-latching extension flush bolt, Type 27 x 626
1 ea.	Dust proof strike, L14011 x 626
2 ea.	Overhead stops, C12541 x 626
1 ea.	Coordinator, Type 21A x 626
1 set	Weatherstripping at head, jamb and meeting stiles
1 set	Rain drip head and door bottom x 628
1 ea.	Threshold, J32180 x 628

CHW-10 Door no. C119, C122

3 ea. Hinges, A2111 x 626
1 ea. Lockset, F86 - Grade 1x 626 (lever)
1 ea. Stop, L12141 x 626 with stud and expansion shield

CHW-11 Door no. C123

3 ea. Hinges, A2111 x 626
1 ea. Exit device, Type 1, Function 08 - Grade 1 x 626 (lever)
1 ea. Closer, C72021 x 689
1 ea. Kickplate, J102 x 630
1 ea. Stop, L12141 x 626 with stud and expansion shield

CHW-12 Door no. C124, C125

3 ea. Hinges, A5111 x 630
1 ea. Lockset, F82 - Grade 1 x 630 (lever)
1 ea. Closer, C72021 x 689
1 ea. Kickplate, J102 x 630
1 ea. Overhead stop, C12541 x 626
1 set Weatherstripping at head, jamb and meeting stiles
1 ea. Threshold, J36130 x 628
1 set Rain drip head and door bottom x 628

CHW-13 Door no. C126

3 ea. Hinges, A5111 x 630
1 ea. Lockset, F82 - Grade 1 x 630 (lever)
1 ea. Closer, C72021 x 689
1 ea. Kickplate, J102 x 630
1 ea. Mop plate, J103 x 630
1 ea. Stop, L12141 x 626 with stud and expansion shield
1 ea. Threshold, as detailed x marble

CHW-14 Door no. C127

3 ea. Hinges, A5111 x 630
1 ea. Lockset, F82 - Grade 1 x 630 (lever)
1 ea. Closer, C72021 x 689
1 ea. Kickplate, J102 x 630
1 ea. Mop plate, J103 x 630
1 ea. Overhead stop, C12541 x 626
1 ea. Threshold, as detailed x marble

CHW-15 Door no. C130

1 ½ pr. Hinges, A8111 x 652 (wide throw)(w/NRP x security safety studs) by door manufacturer, (height & gage, as necessary for proper support and operation of the door)
1 ea. High security hasp, as detailed, by using agency
1 ea. Padlock, to be provided by the using agency
1 ea. Slide bolt, L54161 x 630 (Arms room side of door)1 ea. Surface

pull, D1791 x min. 7" length x 603
1 ea. Stop, L12131 x 626 x ES (heavy duty, or as necessary to accommodate weight of door)
1 ea. Closer, C02011, PT-4G x 689
1 ea. Electromagnetic holder, C00011 x 689 (see Fire Alarm Riser)

CHW-16 Door no. C130a

1 1/2 pr. Hinges A8111 x 652 (swing clear)(w/NRP x security safety studs)by day-gate manufacturer, welded to gates and frame as detailed.
1 ea. High security hasps, as detailed, by using agency
1 ea. Padlocks, to be provided by the using agency
1 ea. Stops, L12131 x 626 x ES (heavy duty, or as necessary to accommodate weight of door)

CHW-17 Door no. C128, C129, C131, C132, C133

BY MANUFACTURER

DINING

DHW-1 Door No. D101, D103, D130, D134, D138

2 pr. Pivots, C07121, by door manufacturer x finish to match door
6 ea. Intermediate pivots, C07321, by door manufacturer x finish to match door
2 ea. Exit devices, Type 2, Function 08 - Grade 1 , by door manufacturer x finish to match door (lever)
2 ea Pull bars, J502 by door manufacturer x factory finish to match doors
2 ea. Closers, C02021 by door manufacturer x finish to match door
2 ea. Stops, L11371 x 626 with stud and expansion shield
1 set Weatherstripping, at head, jambs, and meeting stiles
1 ea. Door sweep shoe, R3C505 X 626
1 ea. Threshold, J33100 x 628

DHW-2 Door No. D102, D129, D135, D139

2 pr. Pivots, C07161, by door manufacturer x finish to match door
6 ea. Intermediate pivots, C07382, by door manufacturer x finish to match door
2 ea. Pull bars, J502, by door manufacturer x finish to match door
2 ea. Push bars, J501 by door manufacturer x finish to match door
2 ea. Closers, C02021 by door manufacturer x finish to match door (Provide adapter as needed to allow for clearance of overhead door stop.)
2 ea. Stops, C11371 x 626 with stud and expansion shield

DHW-3 Door No. D104, D105, D127

10 ea. Hinges, A2111 x 626
1 ea. Lockset, F82 - Grade 1 x 626 (lever)
2 ea. Closers, C02021 x 689 (Provide adapter as needed to allow for clearance of overhead door stop.)
2 pr. Self Latching Flush bolts, Type 27 x 626
2 ea. Overhead stop, C02541 x 626
1 ea. Astragal, overlapping steel x 600
1 ea. Coordinator, Type 21A x 626
1 ea. Kickplate, 102 x 630
1 set Weatherstripping @ head, jambs, and meeting stiles
1 ea. Dustproof strike, L04021 x 626
1 set Rain Drip, Head and Door Bottom x 628
1 ea. Threshold, J36330 x 628

DHW-4 Door No. D106, D145, D146

5 ea. Hinges, A2111 x 626
1 ea. Lockset, F82 - Grade 1 x 626 (lever)
1 ea. Closer, C02021 x 689 (Provide adapter as needed to allow for clearance of overhead door stop.)
1 ea. Overhead stop, C02541 x 626
1 ea. Kickplate, J102 x 630
1 set Weatherstripping @ head, and jambs
1 set Rain Drip, Head and Door Bottom x 628
1 ea. Threshold, J36330 x 628

DHW-5 Door No. D107, D109, D123

3 ea. Hinges, A2111 x 626
1 ea. Lockset, F86 - Grade 1 x 626 (lever)
1 ea. Stop, L11371 x 626 with stud and expansion shield

DHW-6 Door No. D108

3 ea. Hinges, A2111 x 626
1 ea. Lockset, F82 - Grade 1 x 626 (lever)
1 ea. Closer, C02021 x 689
1 ea. Kickplate, J102 x 630
1 ea. Stop, L12141 x 626 with stud and expansion shield

DHW-7 Door No. D111, D112, D131, D132, D143, D144

3 ea. Hinges, A5111 x 630
1 ea. Push Plate, J304 x 630
1 ea. Pull Plate, J407 x 630
1 ea. Closer, C02021 x 689
1 ea. Kickplate, J102 x 630
1 ea. Mop Plate, J103 x 630
1 ea. Stop, L22141 x 626 with stud and expansion shield
1 ea. Threshold, as detailed x marble

DHW-8 Door No. D113, D128 D137

3 ea. Hinges, A2111 x 626 (wide throw)
1 ea. Lockset, F86 - Grade 1 x 626 (lever)
1 ea. Stop, L22141 x 626 with stud and expansion shield

DHW-9 Door No. D114, D122

3 ea. Hinges, A5111 x 630
1 ea. Latch bolt, F75 - Grade 1 x 626 (lever)
1 ea. Closer, C02021 x 689
1 ea. Kickplate, J102 x 630\
1 ea. Armor Plate, J101 x 630
1 ea. Over head stop, C02541 x 626

DHW-10 Door No. D115, D141

3 ea. Hinges, A2111 x 626
1 ea. Lockset, F82 - Grade 1 x 626 (lever)
1 ea. Closer, C02011 x 689
1 ea. Kickplate, J102 x 630
1 ea. Stop, L11371 x 626 with stud and expansion shield
1 ea. Mop plate, J103 x 630

DHW-11 Door no. D116, D117, D118

3 ea. Hinges, A2111 x 626
1 ea. Lockset, F82 - Grade 1 x 626 (lever)
1 ea. Stop, L02041 x 626 with stud and expansion shield

DHW-12 Door no. D119, D124, D136

4 ea. Hinges, K51041 x 630
2 ea. Trucking doorway bumper, K57434 x 630
4 ea. Armor plates, J101 x 630
2 ea. Replaceable nosing at meeting stiles
4 ea. Push plates, J304 x 630

DHW-13 Door no. D120, D121

3 ea. Hinges, A5111 x 630
1 ea. Push plate, J301 x 630
1 ea. Pull plate, J405 x 630
1 ea. Closer, C02011 X 689
1 ea. Kickplate, J102 x 630
1 ea. Armor plate, J101 x 630
1 ea. Mop plate, J103 x 630
1 ea. Stop, L12161 x 626 with stud and expansion shield

DHW-14 Door No. D125

10 ea. Hinges, A2111 x 626
1 ea. Lockset, F82 - Grade 1 x 626 (lever)

2 ea.	Closers, C02021 x 689 (Provide adapter as needed to allow for clearance of overhead door stop.)
2 ea.	Overhead stop, C02541 x 626
2 pr.	Self Latching Flush bolts, Type 27 x 626
1 ea.	Dustproof strike, L04021 x 626
1 ea.	Coordinator, Type 21A x 626
1 ea.	Kickplate, J102 x 630
1 set	Weatherstripping @ head, jambs, and meeting stiles
1 ea.	Threshold, J36330 x 628

DHW-15 Door No. D126

5 ea.	Hinges, A2111 x 626
1 ea.	Lockset, F82 - Grade 1 x 626 (lever)
1 ea.	Closer, C02021 x 689 (Provide adapter as needed to allow for clearance of overhead door stop.)
1 ea.	Overhead stop, C02541 x 626
1 ea.	Kickplate, J102 x 630
1 set	Weatherstripping @ head, and jambs
1 ea.	Threshold, J36330 x 628

DHW-16 Door No. D133, D142

2 pr.	Top pivots, C07021, by door manufacturer x finish to match door
6 ea.	Intermediate pivot, C07321 by door manufacturer x finish to match door
2 ea.	Floor closers, C06011, center pivoted, double acting x finish to match door
4 ea.	Push bars, J501 x 626
2 ea.	Stop, L12041 x 626 with stud and expansion shield

DHW-17 Door no. D140

3 ea.	Hinges, A2111 x 626
1 ea.	Latchset, F75 - Grade 1 x 626 (lever)
1 ea.	Stop, L12141 x 626 with stud and expansion shield

DHW-18 Door no. D110

4 ea.	Hinges, A2111 x 626
1 ea.	Lockset, F82- Grade 1 x 626 (lever)
1 ea.	Surface bolt, L24151 x 626
1 ea.	Stop, L12141 x 626 with stud and expansion shield

ENERGY PLANT

EHW-1 Door no. E101

3 ea.	Hinges, A8111 x 652
1 ea.	Lockset, F82 - Grade 1 x 652 (knob)
1 ea.	Stop, L11371 x 626 with stud and expansion shield

-- End of Section --

SECTION 08810

GLASS AND GLAZING
05/97
Amendment 0004

PART 1 GENERAL

1.1 REFERENCES

The publications listed below form a part of this specification to the extent referenced. The publications are referred to in the text by basic designation only.

AMERICAN NATIONAL STANDARDS INSTITUTE (ANSI)

ANSI Z97.1	(1984; R 1994) Safety Performance Specifications and Methods of Test for Safety Glazing Materials Used in Buildings

AMERICAN SOCIETY FOR TESTING AND MATERIALS (ASTM)

ASTM C 509	(1994) Elastomeric Cellular Preformed Gasket and Sealing Material
ASTM C 669	(1995) Glazing Compounds for Back Bedding and Face Glazing of Metal Sash
ASTM C 864	(1999) Dense Elastomeric Compression Seal Gaskets, Setting Blocks, and Spacers
ASTM C 920	(1998) Elastomeric Joint Sealants
ASTM C 1036	(1991; R 1997) Flat Glass
ASTM C 1048	(1997b) Heat-Treated Flat Glass - Kind HS, Kind FT Coated and Uncoated Glass
ASTM C 1172	(1996el) Laminated Architectural Flat Glass
ASTM C 1349	(1996) Architectural Flat Glass Clad Polycarbonate
ASTM D 395	(1998) Rubber Property - Compression Set
ASTM E 119	(1998) Fire Tests of Building Construction and Materials
ASTM E 773	(1997) Accelerated Weathering of Sealed Insulating Glass Units
ASTM E 774	(1997) Classification of the Durability of Sealed Insulating Glass Units
ASTM E 1300	(1998) Determining the Minimum Thickness and Type of Glass Required to Resist a

Specified Load

AMERICAN SOCIETY OF CIVIL ENGINEERS (ASCE)

ASCE 7	(1995) Minimum Design Loads for Buildings and Other Structures

CODE OF FEDERAL REGULATIONS (CFR)

16 CFR 1201	Safety Standard for Architectural Glazing Materials

COMMERCIAL ITEM DESCRIPTION (CID)

CID A-A-378	(Basic) Putty Linseed Oil Type, (for Wood-Sash-Glazing)

GLASS ASSOCIATION OF NORTH AMERICA (GANA)

GANA Glazing Manual	(1997) Glazing Manual
GANA Standards Manual	(1995) Engineering Standards Manual

NATIONAL FIRE PROTECTION ASSOCIATION (NFPA)

NFPA 80	(1999) Fire Doors and Fire Windows
NFPA 252	(1995) Fire Tests of Door Assemblies
NFPA 257	(1996) Fire Tests for Window and Glass Block Assemblies

1.2 SUBMITTALS

Government approval is required for submittals with a "G" designation; submittals not having a "G" designation are for information only. When used, a designation following the "G" designation identifies the office that will review the submittal for the Government. The following shall be submitted in accordance with Section 01330 SUBMITTAL PROCEDURES:

SD-02 Shop Drawings

Installation

Drawings showing complete details of the proposed setting methods, mullion details, edge blocking, size of openings, frame details, materials, and types and thickness of glass.

SD-03 Product Data

Insulating Glass
Glazing Accessories

Manufacturer's descriptive product data, handling and storage recommendations, installation instructions, and cleaning instructions.

SD-04 Samples

Insulating Glass

Two 203 x 254 mm samples of each of the following: tinted glass, patterned glass, heat-absorbing glass, and insulating glass units.

SD-07 Certificates

Insulating Glass

Certificates stating that the glass meets the specified requirements. Labels or manufacturers marking affixed to the glass will be accepted in lieu of certificates.

1.3 SYSTEM DESCRIPTION

Glazing systems shall be fabricated and installed watertight and airtight to withstand thermal movement and wind loading without glass breakage, gasket failure, deterioration of glazing accessories, and defects in the work. Glazed panels shall comply with the safety standards, as indicated in accordance with ANSI Z97.1. Glazed panels shall comply with indicated wind/snow loading in accordance with ASTM E 1300.

1.4 DELIVERY, STORAGE AND HANDLING

Glazing compounds shall be delivered to the site in the manufacturer's unopened containers. Glass shall be stored indoors in a safe, well ventilated dry location in accordance with manufacturer's instructions, and shall not be unpacked until needed for installation. Glass shall not be stored on site over 1 month.

1.5 PROJECT/SITE CONDITIONS

Glazing work shall not be started until outdoor temperature is above 5 degrees C and rising, unless procedures recommended by glass manufacturer and approved by Contracting Officer are made to warm the glass and rabbet surfaces. Ventilation shall be provided to prevent condensation of moisture on glazing work during installation. Glazing work shall not be performed during damp or raining weather.

1.6 WARRANTY

1.6.1 Insulating Glass

Manufacturer shall warrant the insulating glass to be free of fogging or film formation on the internal glass surfaces caused by failure of the hermetic seal for a period of 10 years from Date of Substantial Completion. Warranty shall be signed by manufacturer.

PART 2 PRODUCTS

2.1 FLOAT GLASS

2.1.1 Annealed Glass

Annealed glass shall be Type I transparent flat type, Class 1 - clear, Quality q3 - glazing select, conforming to ASTM C 1036..

2.2 ROLLED GLASS

2.2.1 Wired Glass

Wired glass shall be Type II flat type, Class 1 - translucent, Quality q8 - glazing, Form 1 - wired and polished both sides, conforming to ASTM C 1036. Wire mesh shall be polished stainless steel Mesh 1 - diamond. Wired glass for fire-rated windows shall bear an identifying UL label or the label of a nationally recognized testing agency, and shall be rated for 20 minutes when tested in accordance with NFPA 257. Wired glass for fire-rated doors shall be tested as part of a door assembly in accordance with NFPA 252.

2.3 INSULATING GLASS

Insulating glass shall be Class A preassembled units of dual-seal construction consisting of lites of glass separated by an aluminum, steel, or stainless steel, spacer and dehydrated space conforming to ASTM E 773 and ASTM E 774. Spacer shall be roll-formed, with bent or tightly welded or keyed and sealed joints to completely seal the spacer periphery and eliminate moisture and hydrocarbon vapor transmission into airspace through the corners. Primary seal shall be compressed polyisobutylene and the secondary seal shall be a specially formulated silicone. Glass types shall be as follows:

2.3.1 Tempered Insulating Glass

Interior and exterior glass panes shall be fully tempered transparent flat type glass, Class 2-tinted, Quality q3 - glazing select, conforming to ASTM C 1036. Glass performance shall be K-Value/Winter Nighttime 0.46 minimum , shading coefficient 0.71. Color shall be clear. Visable transmittance shall be a minimum of 61%.

2.3.2 Low-E Insulating Glass

Interior glass panes for Low-E insulating units shall be **(am#4)** Type I annealed laminated glass units **(minimum of 6 mm total thickness for interior (inner) panes) (am#4)**, Class 1-clear, Quality q3 - glazing select, conforming to ASTM C 1036. Exterior glass panes for Low-E insulating units shall be Type I annealed flat glass, Class 2-tinted with anti-reflective low-emissivity coating on No. 2 surface (inside surface of exterior pane), Quality q3 - glazing select, conforming to ASTM C 1036. Glass performance shall be -Value/Winter Nighttime 0.49 minimum, shading coefficient 0.73. Color shall be medium bronze.

2.4 HEAT-TREATED GLASS

Heat-treated glass shall conform to the following requirements.

2.4.1 Tempered Glass

Tempered glass shall be kind FT fully tempered transparent flat type, Class 1-clear, Condition A uncoated surface, Quality q3 - glazing select, 0.71 shading coefficient conforming to ASTM C 1048 and GANA Standards Manual. Color shall be clear.

2.5 LAMINATED GLAZINGS

2.5.1 Laminated Glass

Laminated glass shall consist of two layers of Type 1 annealed transparent flat glass, Class 1-clear Quality q3 - glazing select, conforming to ASTM C 1036. Glass shall be bonded together with 0.76 mm thick PVB interlayer under pressure, or alternatives such as resin laminates, conforming to requirements of 16 CFR 1201 and ASTM C 1172. Color shall be clear.

2.6 FIRE/SAFETY RATED GLASS

Fire/safety rated glass shall be laminated Type I transparent flat type, Class 1-clear. Glass shall have a 20 minute rating when tested in accordance with ASTM E 119. Glass shall be permanently labeled with appropriate markings.

2.7 MIRRORS

2.7.1 Glass Mirrors

Glass for mirrors shall be Type I transparent flat type, Class 1-clear, Glazing Quality q1 6 mm (1/4 inch) thick conforming to ASTM C 1036. Glass color shall be clear. Glass shall be coated on one surface with silver coating, copper protective coating, and mirror backing paint. Silver coating shall be highly adhesive pure silver coating of a thickness which shall provide reflectivity of 83 percent or more of incident light when viewed through 6 mm (1/4 inch) thick glass, and shall be free of pinholes or other defects. Copper protective coating shall be pure bright reflective copper, homogeneous without sludge, pinholes or other defects, and shall be of proper thickness to prevent "adhesion pull" by mirror backing paint. Mirror backing paint shall consist of two coats of special scratch and abrasion-resistant paint , and shall be baked in uniform thickness to provide a protection for silver and copper coatings which will permit normal cutting and edge fabrication.

2.7.2 One-Way Mirrors or One Way Vision Glass

Glass for one-way mirrors shall be Type I transparent flat type, Class 1 clear, Glazing Quality q1, 6 mm (1/4 inch) thick conforming to ASTM C 1036. Glass shall be coated on one face with a hard adherent film of chromium or other approved coating of proven equivalent durability. Glass shall transmit not less than 5 percent nor more than 11 percent of total incident light in visible region, and shall reflect from front surface of coating not less than 45 percent of total incident light in visible region.

2.7.3 Mirror Accessories

2.7.3.1 Mastic

Mastic for setting mirrors shall be a polymer type mirror mastic resistant to water, shock, cracking, vibration and thermal expansion. Mastic shall be compatible with mirror backing paint, and shall be approved by mirror manufacturer.

2.7.3.2 Mirror Frames

Mirrors shall be provided with mirror frames (J-mold channels) fabricated of one-piece roll-formed Type 304 stainless steel with No. 4 brushed satin finish and concealed fasteners which will keep mirrors snug to wall. Frames shall be 32 x 6 x 6 mm (1-1/4 x 1/4 x 1/4 inch) continuous at top and bottom of mirrors. Concealed fasteners of type to suit wall construction material shall be provided with mirror frames.

2.8 GLAZING ACCESSORIES

2.8.1 Preformed Tape

Preformed tape shall be elastomeric rubber extruded into a ribbon of a width and thickness suitable for specific application. Tape shall be of type which will remain resilient, have excellent adhesion, and be chemically compatible to glass, metal, or wood.

2.8.2 Sealant

Sealant shall be elastomeric conforming to ASTM C 920, Type S or M, Grade NS, Class 12.5, Use G, of type chemically compatible with setting blocks, preformed sealing tape and sealants used in manufacturing insulating glass. Color of sealant shall be aluminum colored to match frame, nonstaining and not require paining when used with aluminum frames. Other materials which will be exposed to view and unpainted shall be gray or neutral in color.

2.8.3 Glazing Gaskets

Glazing gaskets shall be extruded with continuous integral locking projection designed to engage into metal glass holding members to provide a watertight seal during dynamic loading, building movements and thermal movements. Glazing gaskets for a single glazed opening shall be continuous one-piece units with factory-fabricated injection-molded corners free of flashing and burrs. Glazing gaskets shall be in lengths or units recommended by manufacturer to ensure against pull-back at corners. Glazing gasket profiles shall be as indicated on drawings.

2.8.3.1 Fixed Glazing Gaskets

Fixed glazing gaskets shall be closed-cell (sponge) smooth extruded compression gaskets of cured elastomeric virgin neoprene compounds conforming to ASTM C 509, Type 2, Option 1.

2.8.3.2 Wedge Glazing Gaskets

Wedge glazing gaskets shall be high-quality extrusions of cured elastomeric virgin neoprene compounds, ozone resistant, conforming to ASTM C 864, Option 1, Shore A durometer between 65 and 75.

2.8.3.3 Aluminum Framing Glazing Gaskets

Glazing gaskets for aluminum framing shall be permanent, elastic, non-shrinking, non-migrating, watertight and weathertight.

2.8.4 Putty and Glazing Compound

Glazing compound shall conform to ASTM C 669 for face-glazing metal sash. Putty shall be linseed oil type conforming to CID A-A-378for face-glazing primed wood sash. Putty and glazing compounds shall not be used with insulating glass or laminated glass.

2.8.5 Setting and Edge Blocking

Neoprene setting blocks shall be dense extruded type conforming to ASTM D 395, Method B, Shore A durometer between 70 and 90. Edge blocking shall be Shore A durometer of 50 (+ or - 5). Silicone setting blocks shall be

required when blocks are in contact with silicone sealant. Profiles, lengths and locations shall be as required and recommended in writing by glass manufacturer.

PART 3 EXECUTION

3.1 PREPARATION

Openings and framing systems scheduled to receive glass shall be examined for compliance with approved shop drawings, GANA Glazing Manual and glass manufacturer's recommendations including size, squareness, offsets at corners, presence and function of weep system, face and edge clearance requirements and effective sealing between joints of glass-framing members. Detrimental materials shall be removed from glazing rabbet and glass surfaces and wiped dry with solvent. Glazing surfaces shall be dry and free of frost.

3.2 INSTALLATION

Glass and glazing work shall be performed in accordance with approved shop drawings, GANA Glazing Manual, glass manufacturer's instructions and warranty requirements. Glass shall be installed with factory labels intact and removed only when instructed. Wired glass and fire/safety rated glass shall be installed in accordance with NFPA 80. Edges and corners shall not be ground, nipped or cut after leaving factory. Springing, forcing or twisting of units during installation will not be permitted.

3.3 CLEANING

Upon completion of project, outside surfaces of glass shall be washed clean and the inside surfaces of glass shall be washed and polished in accordance with glass manufacturer's recommendations.

3.4 PROTECTION

Glass work shall be protected immediately after installation. Glazed openings shall be identified with suitable warning tapes, cloth or paper flags, attached with non-staining adhesives. Reflective glass shall be protected with a protective material to eliminate any contamination of the reflective coating. Protective material shall be placed far enough away from the coated glass to allow air to circulate to reduce heat buildup and moisture accumulation on the glass. Glass units which are broken, chipped, cracked, abraded, or otherwise damaged during construction activities shall be removed and replaced with new units.

-- End of Section --

SECTION 09250

GYPSUM WALLBOARD
06/97
Amendment 0004

PART 1 GENERAL

1.1 REFERENCES

The publications listed below form a part of this specification to the extent referenced. The publications are referred to in the text by basic designation only.

AMERICAN NATIONAL STANDARDS INSTITUTE (ANSI)

ANSI A108.11	(1992) Interior Installation of Cementitiuos Backup Units
ANSI A118.9	(1992) Test Methods and Spedifications for Cementitious Backer Units

AMERICAN SOCIETY FOR TESTING AND MATERIALS (ASTM)

ASTM A 580/A 580M	(1998) Stainless Steel Wire
ASTM A 853	(1993; R 1998) Steel Wire, Carbon, for General Use
ASTM C 36/C 36M	(1999) Gypsum Wallboard
ASTM C 79/C 79M	(1997) Treated Core and Nontreated Core Gypsum Sheathing Board
ASTM C 475	(1994) Joint Compound and Joint Tape for Finishing Gypsum Board
ASTM C 514	(1996) Nails for the Application of Gypsum Board
ASTM C 630/C 630M	(1996a) Water-Resistant Gypsum Backing Board
ASTM C 645	(2000) Nonstructural Steel Framing Members
ASTM C 754	(1999a) Installation of Steel Framing Members to Receive Screw-Attached Gypsum Panel Products
ASTM C 840	(1999) Application and Finishing of Gypsum Board

ASTM C 1002	(1998) Steel Drill Screws for the Application of Gypsum Panel Products or Metal Plaster Bases
ASTM C 1047	(1999) Accessories for Gypsum Wallboard and Gypsum Veneer Base
ASTM C 1177/C 1177M	(1999) Glass Mat Gypsum Substrate for Use as Sheathing
ASTM C 1178/C 1178M	(1999) Glass Mat Water-Resistant Gypsum Backing Panel

GYPSUM ASSOCIATION (GA)

GA 214	(1996) Recommended Levels of Gypsum Board Finish
GA 216	(1996) Application and Finishing of Gypsum Board
GA 600	(1997) Fire Resistance Design Manual

UNDERWRITERS LABORATORIES (UL)

UL Fire Resist Dir	(1999) Fire Resistance Directory (2 Vol.)

deleted reference (am#4)

1.2 SYSTEM DESCRIPTION

1.2.1 Fire-Rated Construction

Joints of fire-rated gypsum board enclosures shall be closed and sealed in accordance with UL test requirements or GA requirements, and as required to meet pressurization requirements. Penetrations through rated partitions and ceilings shall be sealed tight in accordance with tested systems. Fire ratings shall be as indicated.

1.2.2 Pressurized Enclosures

Pressurized fire-rated gypsum board enclosures shall allow the mechanical and electrical life-safety systems to operate in accordance with the design intent. Air pressure within elevator shaft shall be 360 Pa. Air pressure within stair shaft shall be 240 Pa. Maximum mid-span deflection shall be L/360.

1.3 SUBMITTALS

Government approval is required for submittals with a "G" designation; submittals not having a "G" designation are for information only. When

used, a designation following the "G" designation identifies the office that will review the submittal for the Government. The following shall be submitted in accordance with Section 01330 SUBMITTAL PROCEDURES:

SD-02 Shop Drawings

Steel Framing
Control Joints
Fire-Resistant Assemblies
Suspended Ceiling Framing; G, AE
Drawings and installation details for ceiling framing, furring, special wall framing, and framed openings in walls and ceilings.

SD-07 Certificates

Gypsum Wallboard
Water-Resistant Gypsum Board
Exterior Cement Board
Steel Framing
Fire-Rated Gypsum Board
Cementitious Backer Units

Certificates stating that the steel framing and gypsum wallboard meet the specified requirements.

1.4 QUALIFICATIONS

Manufacturer shall specialize in manufacturing the types of material specified and shall have a minimum of 10 years of documented successful experience. Installer shall specialize in the type of gypsum board work required and shall have a minimum of 3 years of documented successful experience.

1.5 DELIVERY, STORAGE AND HANDLING

Materials shall be delivered in original containers bearing the name of manufacturer, contents, and brand name. Materials shall be stored off the ground in a weathertight structure for protection. Gypsum boards shall be stacked flat, off floor and supported to prevent sagging and warpage. Adhesives and joint materials shall be stored in accordance with manufacturer's printed instructions. Damaged or deteriorated materials shall be removed from jobsite.

1.6 ENVIRONMENTAL CONDITIONS

Environmental conditions for application and finishing of gypsum board shall be in accordance with ASTM C 840. During the application of gypsum board without adhesive, a room temperature of not less than 4 degrees C shall be maintained. During the application of gypsum board with adhesive, a room temperature of not less than 10 degrees C shall be maintained for 48 hours prior to application and continuously afterwards until completely dry. Building spaces shall be ventilated to remove water not required for drying joint treatment materials. Drafts shall be avoided during dry hot weather to prevent materials from drying too rapidly.

PART 2 MATERIALS

2.1 NON-LOADBEARING STUD WALLS

2.1.1 Studs

Studs for non-loadbearing walls shall conform to ASTM C 645. Studs shall be C-shaped, roll formed steel with minimum uncoated design thickness of 0.084 mm (0.0329 in) made from G40 hot-dip galvanized coated sheet. Studs, where shown for exterior wall framing and bridging, shall be provided as specified in Section 05410 - COLD FORMED STEEL STRUCTURAL FRAMING.

2.1.2 Runner Tracks

Floor and ceiling runner tracks shall conform to ASTM C 645. Tracks shall be prefabricated, U-shaped with minimum 25 mm flanges, unpunched web, thickness to match studs, made from G40 hot-dip galvanized coated sheet.

2.2 SUSPENDED CEILING FRAMING

Suspended ceiling framing system shall have the capability to support the finished ceiling, light fixtures, air diffusers, and accessories, as shown. The suspension system shall have a maximum deflection of L/240, **and shall be designed using the attached details at the end of this Specification Section as minimum requirements (am#4)**. Carrying channels shall be formed from minimum 1.40 mm thick cold-rolled steel, 38 x 19 mm. Furring members shall be formed from cold-rolled steel, 22 x 65 mm. Carrying channels and furring members shall be made from hot-dip galvanized coated sheet. Provide drywall reveal molding to equal Type "F" by Fry Reglet Corporation at ceiling perimeter around rooms.

2.3 GYPSUM BOARD

Gypsum board shall contain **no asbestos** and shall have square-cut ends, tapered or beveled edges and shall be maximum possible length. Gypsum board thickness shall be as shown.

2.3.1 Standard Gypsum Board

Regular gypsum board shall conform to ASTM C 36/C 36M, and shall be 1200 mm wide.

2.3.2 Fire-Rated Gypsum Board

Fire-rated gypsum board shall conform to ASTM C 36/C 36M, and shall be Type X or Type C as required, 1200 mm wide.

2.3.3 Water-Resistant Gypsum Board

Water-resistant gypsum board shall conform to ASTM C 630/C 630M, regular or Type X where applicable, with water-resistant paper faces, paintable surfaces, and shall be 1200 mm width and maximum permissible length.

2.3.4 Shaftwall Liner Panel

Shaftwall liner panel shall conform to UL listing. Liner Panel shall be specifically manufactured for cavity shaftwall system, with water-resistant paper faces, bevel edges, single lengths to fit required conditions, 25.4 mm thick, by 600 mm wide.

2.3.5 Exterior Sheathing Board

Exterior sheathing board shall conform to ASTM C 79/C 79M, Type X, shall have water-resistant core, water-repellant paper faces each side, with tongue-and-groove edges, and be 600 mm wide, or square edges and 1200 mm wide. Refer to Section 07240 EXTERIOR INSULATING AND FINISH SYSTEM for substrate.

2.4 TRIM, MOLDINGS, AND ACCESSORIES

2.4.1 Taping and Embedding Compound

Taping and embedding compound shall conform to ASTM C 475. Compound shall be specifically formulated and manufactured for use in embedding tape at gypsum wallboard joints and fastener heads, and shall be compatible with tape and substrate.

2.4.2 Finishing or Topping Compound

Finishing or topping compound shall conform to ASTM C 475. Compound shall be specifically formulated and manufactured for use as a finishing compound for gypsum board.

2.4.3 All-Purpose Compound

All-purpose compound shall be specifically formulated and manufactured to use as a taping and finishing compound, and shall be compatible with tape and substrate.

2.4.4 Joint Tape

Joint tape shall conform to ASTM C 475 and shall be as recommended by gypsum board manufacturer.

2.4.5 Trim, Control Joints, Beads, Stops and Nosings

Items used to protect edges, corners, and to provide architectural features shall be in accordance with ASTM C 1047.

2.5 FASTENINGS AND ADHESIVES

2.5.1 Nails

Nails shall conform to ASTM C 514. Nails shall be hard-drawn low or medium-low carbon steel, suitable for intended use. Special nails for predecorated gypsum board shall be as recommended by predecorated gypsum board manufacturer.

2.5.2 Screws

Screws shall conform to ASTM C 1002. Screws shall be self-drilling and self-tapping steel, Type S for wood or light-gauge steel framing.

2.5.3 Drywall Reveal Molding

Drywall reveal molding shall be "Fry Reglet Corporation's 'F' Type" or approved equal, creating a 13-19mm (1/2 - 3/4") reveal. This trim shall be installed around perimeter of all suspended gypsum board ceilings where

shown or not shown in the drawings!

2.5.4 Hangers

Hangars shall be galvanized steel wire. Hangers and attachment shall be designed to resist forces of 0.5 times the equipment (and system) weight in any direction and 1.5 times the equipment (and system) weight in the downward direction, and per the attached detail at the end of this Specification Section as minimum requirements. (am#4)

2.5.5 Wire and Clip Type Fastenings

Tie wire, clips, rings, and other fastenings shall be corrosion-resisting steel conforming to ASTM A 580/A 580M, composition 302, 304, or 316, Condition A,ornickel-copper alloy conforming to ASTM B 164, annealed condition except that walls, partitions, and other vertical surfaces not incorporated in ceiling construction may be erected with soft, annealed steel conforming to ASTM A 853.

2.5.5.1 Tie Wire

Tie wire for constructing partitions and vertical furring, for securing metal lath to supports, and for lacing shall be not less than No. 18 SWG. Tie wire for other applications shall be not less than No. 16 SWG.

2.5.5.2 Clips

Clips used in lieu of tie wire for securing the furring channels to the runner channels in ceiling construction shall be made from strip not less than 3 mm thick or shall be hairpin clip, formed of wire not less than 0.4 mm nominal diameter. Other clips and rings or fastenings of similar materials shall be equivalent in holding power to that provided by tie wire for the specific application.

2.5.5.3 Light Coves

Light coves shall be made of 6063-T5 extruded aluminum 155mm (6 1/8") by 197mm (7 3/8") in ogee form and 112 (4 3/8") clearance in width on top to receive light fixtures as indicated in the drawings. 90 Degree corners shall be mitered and pre-welded by manufacturer. Units shall be Light Cove #1096 by Gordon, Inc. 972-381-9100 or approved equal. Accessories, closures, alignments, and installation shall be per manufacturer's criteria.

2.6 CEMENTITIOUS BACKER UNITS

Cementitious backer units shall comply with ANSI A118.9.

PART 3 EXECUTION

3.1 INTERIOR WALL FRAMING

Steel framing and furring members shall be installed in accordance with ASTM C 754. Members shall be in alignment with spacings not to exceed the maximum spacings indicated on drawings. Runners shall be aligned accurately at the floor and ceiling and securely anchored.

3.1.1 Wall Openings

The framing system shall provide for the installation and anchorage of the required subframes or finish frames for wall openings at doors, pass-through openings, and access panels. Partitions abutting continuous suspended ceilings shall be strengthened for rigidity at rough openings of more than 750 mm wide. Studs at openings shall be 0.84 mm (0.0329 in) minimum bare metal thickness and spot grouted at jamb anchor inserts. Double studs shall be fastened together with screws and secured to floor and overhead runners. Two studs shall be used for framing each side of all wall openings (i.e. doors, windows, louvers, etc...).

3.1.2 Wall Control Joints

Control joints for expansion and contraction in the walls shall be constructed with double studs installed 13 mm apart in interior walls or wall furrings where indicated on drawings. Control joint spacing shall not exceed 9 m. All door and window frames shall be used as control joints and joints shall extend to ceiling from both corners of top of frames. Control joints between studs shall be filled with firesafing insulation in fire rated partitions. Control joints shall also be provided in furring where CMU control joints are located same as walls.

3.1.3 Blocking

Blocking shall be provided as necessary for mounted equipment. Blocking shall be metal or wood and shall be cut to fit between framing members. Blocking shall be regidly anchored to the framing members. Under no circumstances will accessories or other wall mounted equipment be anchored directly to gypsum wallboard.

3.2 SUSPENDED CEILING FRAMING

Suspended ceiling system framing shall be installed in accordance with ASTM C 754 **and, details attached at end of this Specifications Section as minimum requirements. (am#4)** Coordinate with Section 13080 - SEISMIC PROTECTION FOR MISCELLANEOUS EQUIPMENT (TO MEET ANTI-TERRORISM/FORCE PROTECTION CRITERIA)

3.2.1 Hangers

Hangers shall be spaced not more than 1200 mm along runner channels and 900 mm in the other direction or 1050 mm in both directions **and per the attached details' bracing at the end of this Specification Section as minimum requirements. (am#4)** Locations of hanger wires shall be coordinated with other work. Hangers at ends of runner channels shall be located not more than 150 mm from wall. Hanger wire shall be looped around bottom chord of open-web steel joists, or secured to structural elements with suitable fasteners. Sags or twists which develop in the suspended system shall be adjusted. Damaged or faulty parts shall be replaced.

3.2.2 Main Runners

Main runner channels shall be installed in accordance with ASTM C 754 **(am#4)**. Hanger wires shall be double strand saddle-tied to runner channels and the ends of hanger wire shall be twisted three times around itself. Main runners shall be located to within 150 mm of the paralleling wall to support the ends of cross furring. Main runners shall not come in contact with abutting masonry or concrete walls. Where main runners are spliced, ends shall be overlapped 300 mm with flanges of channels interlocked, and

shall be securely tied at each end of splice with wire looped twice around the channels.

3.2.3 Furring Channels

Furring channels shall be spaced in accordance with ASTM C 754 **(am#4)**. Furring channels shall be secured to the runner channels and to structural supports at each crossing with tie wire, hairpin clips, or equivalent fastenings. Furring channels shall be located within 50 mm of parallel walls and beams, and shall be cut 13 mm short of abutting walls.

3.2.4 Ceiling Openings

Support members shall be provided as required at ceiling openings for access panels, recessed light fixtures, and air supply or exhaust. Support members shall be not less than 38 mm main runner channels and vertically installed suspension wires or straps shall be located to provide at least the minimum support specified herein for furring and wallboard attachment. Intermediate structural members not a part of the structural system, shall be provided for attachment or suspension of support members.

3.2.5 Light Fixtures and Air Diffusers

Light fixtures and air diffusers shall be supported directly from suspended ceiling runners. Wires shall be provided at appropriate locations to carry the weight of recessed or surface mounted light fixtures and air diffusers.

3.2.6 Control Joints

Ceiling control joints for expansion and contraction shall be located where indicated on drawings. A control joint or intermediate blocking shall be installed where ceiling framing members change direction.

3.2.6.1 Interior Ceilings

Control joints shall be installed so that linear dimensions between control joints shall not exceed 15 m in either direction nor more than 230 square meters.

3.2.6.2 Exterior Ceilings

Control joints shall be installed so the linear dimensions between control joints shall not exceed 9 m in either direction nor more than 84 square meters.

3.3 APPLICATION OF GYPSUM BOARD

Gypsum board shall be installed in accordance with ASTM C 840, AG 214 and GA 216 and as specified. Paragraph 17.3.1 GENERAL of ASTM C 840 which permits usage of water resistant gypsum board as a base for adhesive application of ceramic or plastic tile on ceilings, does not apply. Edges and ends of gypsum boards shall be cut to obtain neat fitting joints. End joints of adjoining boards shall be staggered, and shall be staggered on opposite sides of wall. Boards shall be applied with moderate contact without forcing in place. Holes for pipes, fixtures or other small openings shall be cut with a tool which will provide a neat fit. Screws shall be driven so that the heads are slightly below the plane of paper face. Fracturing the paper face or damaging the core shall be avoided. Trim shall be installed at external and internal angles formed by the

intersecting gypsum board surfaces with other surfaces. Corner beads shall be installed to vertical and horizontal corners in accordance with manufacturer's published instructions. Boards of maximum practical length shall be used so that an absolute minimum number of end joints occur. Gypsum board partitions in rooms with ceiling heights less than 3 m shall have full height boards installed vertically with no end joints in the gypsum installation.

3.3.1 Water-Resistant Gypsum Board

Water-resistant gypsum board shall be installed at the locations indicated.

3.4 TRIM, MOLDINGS, AND ACCESSORIES INSTALLATION

Trim, moldings and accessories shall be installed in accordance with GA 216.

3.5 GYPSUM BOARD FINISH

Gypsum board shall be finished in accordance with ASTM C 840, GA 214 and GA 216. Plenum areas above ceilings shall be finished to Level 1 in accordance with GA 214. Walls to receive a heavy-grade wall covering before painting shall be finished to Level 3 in accordance with GA 214. Walls and ceilings without critical lighting to receive flat paints, light textures, or wall coverings shall be finished to Level 4 in accordance with GA 214. Unless otherwise specified, all gypsum board walls, partitions and ceilings shall be finished to Level 5 in accordance with GA 214.

3.6 APPLICATION OF CEMENTITIOUS BACKER UNITS

Cementitious backer units shall be installed in accordance with ANSI A108.11. Fasteners shall be the type designed for cement board application.

3.7 FIRE-RESISTANT ASSEMBLIES

Gypsum wallboard construction for fire-rated assemblies shall be in accordance with UL Fire Resist Dir, or GA 600 for the design number indicated on drawings.

3.8 PATCHING

Surface defects and damage shall be corrected as required to leave gypsum board smooth, uniform in appearance, and ready to receive finish as specified.

-- End of Section --

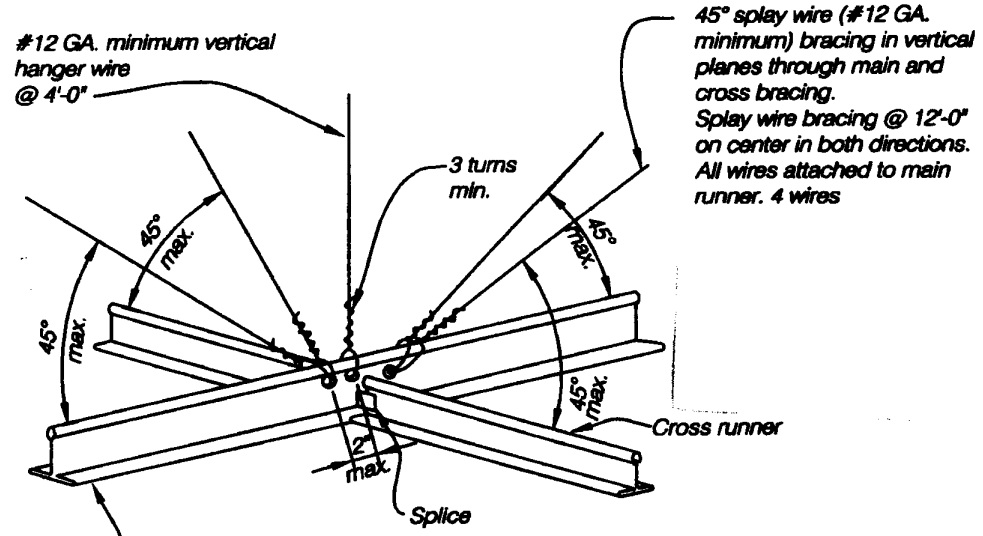

TYP. SPLAY BRACING DETAILSUSPENDED CEILING SYSTEM

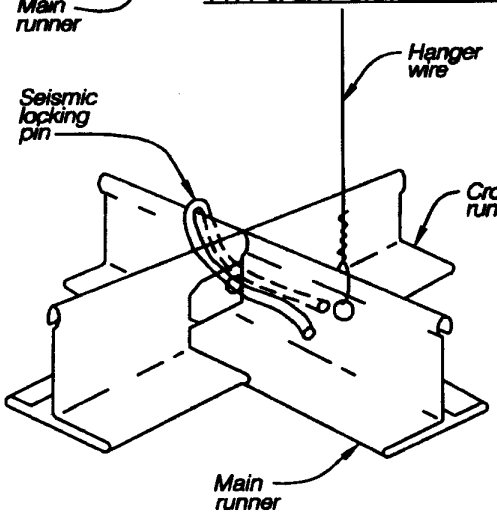

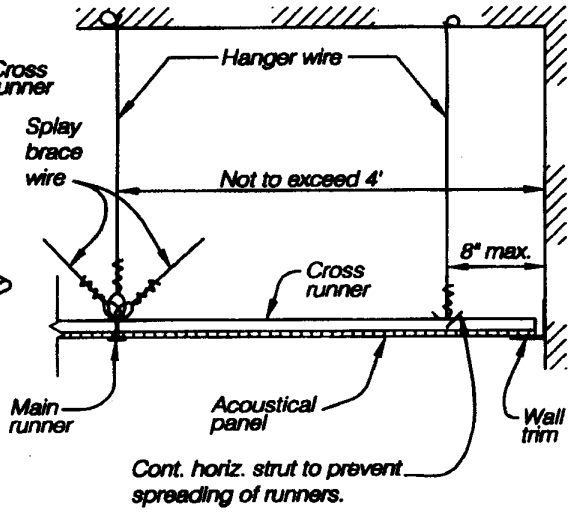

SUSPENDED CEILING DETAIL AT WALL

Locking Clip to Fasten Cross Runner to Main Runner

Splices and intersections of runners shall be attached with mechanical interlocking connectors such as pop rivets, screws, pins, plates with bent tabs, or other approved connectors. Design connectors for 2x design load or ultimate axial tension or compression (minimum 120 pounds).

1 inch = 25mm
1 foot = 0.3m
1 pound = 4.45 N

SECTION 09510

ACOUSTICAL CEILINGS
08/96
Amendment 0002
Amendment 0004

PART 1 GENERAL

1.1 REFERENCES

The publications listed below form a part of this specification to the extent referenced. The publications are referred to in the text by basic designation only.

AMERICAN SOCIETY FOR TESTING AND MATERIALS (ASTM)

ASTM C 635	(1995) Manufacture, Performance, and Testing of Metal Suspension Systems for Acoustical Tile and Lay-In Panel Ceilings
ASTM C 636	(1996) Installation of Metal Ceiling Suspension Systems for Acoustical Tile and Lay-In Panels
ASTM E 119	(1995a) Fire Tests of Building Construction and Materials
	deleted reference (am#4)
ASTM E 1264	(1990) Standard Classification for Acoustical Ceiling Products
ASTM E 1414	(1991a) Standard Test for Airborne Sound Attenuation Between Rooms Sharing a Common Ceiling Plenum
	deleted reference (am#4)

UNDERWRITERS LABORATORIES (UL)

UL Fire Resist Dir	(1997) Fire Resistance Directory (2 Vol)

1.2 SUBMITTALS

Government approval is required for submittals with a "G" designation; submittals not having a "G" designation are for information only. When used, a designation following the "G" designation identifies the office that will review the submittal for the Government. The following shall be submitted in accordance with Section 01330 SUBMITTAL PROCEDURES:

SD-02 Shop Drawings

Approved Detail Drawings; **G, AE (am#4)**

Drawings showing suspension system, method of anchoring and fastening, details, and reflected ceiling plan.

SD-03 Product Data

Acoustical Ceiling Systems; G

Manufacturer's descriptive data, catalog cuts, and installation instructions. Submittals which do not provide adequate data for the product evaluation will be rejected.

SD-04 Samples

Acoustical Units; G

Two samples of each type of acoustical unit and each type of suspension grid tee section showing texture, finish, and color.

SD-06 Test Reports

Fire Resistive Ceilings; G
Ceiling Attenuation Class and Test; G

Reports by an independent testing laboratory attesting that acoustical ceiling systems meet specified fire endurance and sound transmission requirements. Data attesting to conformance of the proposed system to Underwriters Laboratories requirements for the fire endurance rating listed in UL Fire Resist Dir may be submitted in lieu of test reports.

SD-07 Certificates

Acoustical Units; G

Certificate attesting that the mineral based acoustical units furnished for the project contains recycled material and showing an estimated percent of such material.

1.3 GENERAL REQUIREMENTS

Acoustical treatment shall consist of sound controlling units mechanically mounted on a ceiling suspension system. The unit size, texture, finish, and color shall be as specified. The Contractor has the option to substitute inch-pound (I-P) Recessed Light Fixtures (RLF) for metric RLF. If the Contractor opts to furnish I-P RLF, other ceiling elements like acoustical ceiling tiles, air diffusers, air registers and grills, shall also be I-P products. The Contractor shall coordinate the whole ceiling system with other details, like the location of access panels and ceiling penetrations, etc., shown on the drawings. If I-P products are used, the Contractor shall be responsible for all associated labor and materials and for the final assembly and performance of the specified work and products. The location and extent of acoustical treatment shall be as shown on the approved detail drawings. Acoustical Ceiling to be tated for use i high humidity condition.

1.4 DELIVERY AND STORAGE

Materials shall be delivered to the site in the manufacturer's original unopened containers with brand name and type clearly marked. Materials

shall be carefully handled and stored in dry, watertight enclosures. Immediately before installation, acoustical units shall be stored for not less than 24 hours at the same temperature and relative humidity as the space where they will be installed in order to assure proper temperature and moisture acclimation.

1.5 ENVIRONMENTAL REQUIREMENTS

A uniform temperature of not less than 16 degrees C nor more than 29 degrees C and a relative humidity of not more than 70 percent shall be maintained before, during, and after installation of acoustical units.

1.6 SCHEDULING

Interior finish work such as plastering, concrete and terrazzo work shall be complete and dry before installation. Mechanical, electrical, and other work above the ceiling line shall be completed and heating, ventilating, and air conditioning systems shall be installed and operating in order to maintain temperature and humidity requirements.

1.7 WARRANTY

Manufacturer's standard performance guarantees or warranties that extend beyond a one year period shall be provided. Standard performance guarantee or warranty shall contain an agreement to repair or replace acoustical panels that fail within the warranty period. Failures include, but are not limited to, sagging and warping of panels; rusting and manufacturers defects of grid system.

1.8 EXTRA MATERIALS

Spare tiles of each color shall be furnished at the rate of 5 tiles for each 1000 tiles installed. Tiles shall be from the same lot as those installed.

PART 2 PRODUCTS

2.1 ACOUSTICAL UNITS

Acoustical units shall conform to ASTM E 1264, Class A, and the following requirements:

2.1.1 Units for Exposed-Grid System

Type: IV (mineral fiber with membrane-faced overlay) . Type IV acoustical units shall have a minimum recycled material content of 70 percent.

Minimum NRC: .70 when tested on mounting No. E-400

Pattern: E.

Nominal size: 600 by 600 mm.

Edge detail: Beveled Tegular.

Finish: Factory-applied standard white finish .

Minimum LR coefficient: .89.

Minimum CAC: .35.

2.2 SUSPENSION SYSTEM

Suspension system shall be exposed-grid , and shall conform to ASTM C 635 for intermediate-duty systems . Surfaces exposed to view shall be aluminum or steel with a factory-applied white baked polyester paint or anodized finish . Wall molding shall have a flange of not less than 23 mm . Inside and outside corner caps shall be provided. Suspended ceiling framing system shall have the capability to support the finished ceiling, light fixtures, air diffusers, and accessories, as shown. The suspension system shall have a maximum deflection of 1/360 of span length. **The suspended ceiling system shall be designed using the attached details at the end of this Specification Section as minimum requirements. (am#4)**

2.3 HANGERS

Hangers shall be galvanized steel wire. **Hangers and attachment shall be designed to resist forces of 0.5 times the equipment (and system) weight in any direction and 1.5 times the equipment (and system) weight in the downward direction, and per the attached detail at the end of this Specification Section as minimum requirements. (am#4)**

2.4 ACCESS PANELS

Access panels shall match adjacent acoustical units and shall be designed and equipped with suitable framing and fastenings for removal and replacement without damage. Panel shall be not less than 300 by 300 mm or more than An identification plate of 0.8 mm thick aluminum, 19 mm in diameter, stamped with the letters "AP" and finished the same as the unit, shall be attached near one corner on the face of each access panel.

2.5 FINISHES

Acoustical units and suspension system members shall have manufacturer's standard textures, patterns and finishes as specified. Ceiling suspension system components shall be treated to inhibit corrosion.

2.6 COLORS AND PATTERNS

Colors and patterns for acoustical units and suspension system components shall be as specified in Section 09915 Color Schedule.

2.7 CEILING ATTENUATION CLASS AND TEST

Ceiling attenuation class (CAC) range of acoustical units, when required, shall be determined in accordance with ASTM E 1414. Test ceiling shall be continuous at the partition and shall be assembled in the suspension system in the same manner that the ceiling will be installed on the project. System shall be tested with all acoustical units installed.

PART 3 EXECUTION

3.1 INSTALLATION

Acoustical work shall be provided complete with necessary fastenings, clips, and other accessories required for a complete installation. Mechanical fastenings shall not be exposed in the finished work. Hangers shall be laid out for each individual room or space. Hangers shall be

placed to support framing around beams, ducts, columns, grilles, and other penetrations through ceilings. Main runners and carrying channels shall be kept clear of abutting walls and partitions. At least two main runners shall be provided for each ceiling span. Wherever required to bypass an object with the hanger wires, a subsuspension system shall be installed, so that all hanger wires will be plumb.

3.1.1 Suspension System

Suspension system shall be installed in accordance with ASTM C 636, **details attached at end of this Specifications Section as minimum requirements, (am#4)** and as specified herein. There shall be no hanger wires or other loads suspended from underside of steel decking.

3.1.1.1 Plumb Hangers

Hangers shall be plumb and shall not press against insulation covering ducts and pipes.

3.1.1.2 Splayed Hangers

Where hangers must be splayed (sloped or slanted) around obstructions, the resulting horizontal force shall be offset by bracing, countersplaying, or other acceptable means.

3.1.2 Wall Molding

Wall molding shall be provided where ceilings abut vertical surfaces. Wall molding shall be secured not more than from ends of each length and not more than on centers between end fastenings. Wall molding springs shall be provided at each acoustical unit in semi-exposed or concealed systems.

3.1.3 Acoustical Units

Acoustical units shall be installed in accordance with the approved installation instructions of the manufacturer. Edges of acoustical units shall be in close contact with metal supports, with each other, and in true alignment. Acoustical units shall be arranged so that units less than one-half width are minimized. **All exposed grid system acoustical tile units shall be held in place with manufacturer's standard hold-down clips. (am#2)**

3.2 CEILING ACCESS PANELS

Ceiling access panels shall be located directly under the items which require access.

3.3 CLEANING

Following installation, dirty or discolored surfaces of acoustical units shall be cleaned and left free from defects. Units that are damaged or improperly installed shall be removed and new units provided as directed.

-- End of Section --

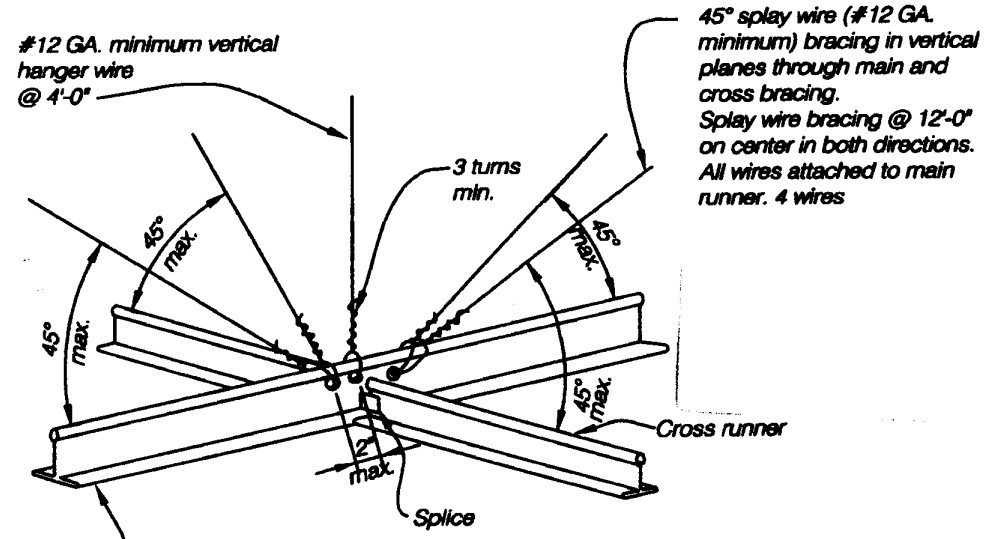

TYP. SPLAY BRACING DETAILSUSPENDED CEILING SYSTEM

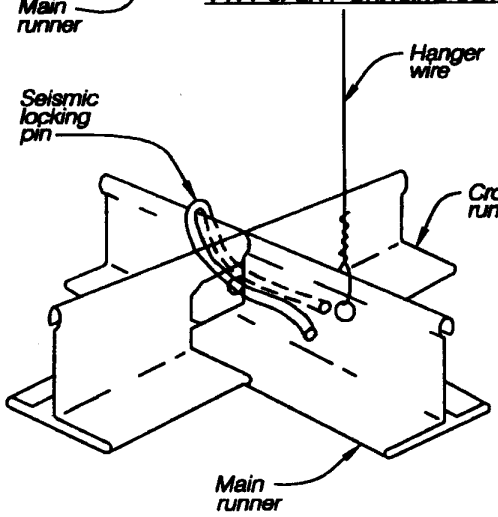

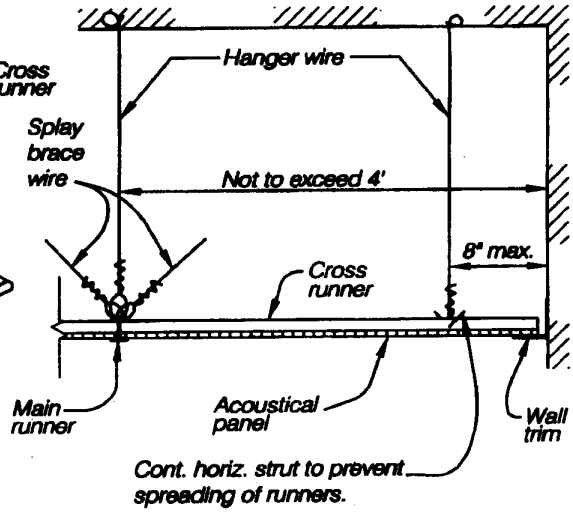

SUSPENDED CEILING DETAIL AT WALL

Locking Clip to Fasten Cross Runner to Main Runner

Splices and intersections of runners shall be attached with mechanical interlocking connectors such as pop rivets, screws, pins, plates with bent tabs, or other approved connectors. Design connectors for 2x design load or ultimate axial tension or compression (minimum 120 pounds).

1 inch = 25mm
1 foot = 0.3m
1 pound = 4.45 N

SECTION 09900

PAINTING, GENERAL
07/92
Amendment 0004

PART 1 GENERAL

1.1 REFERENCES

The publications listed below form a part of this specification to the extent referenced. The publications are referred to in the text by basic designation only.

AMERICAN CONFERENCE OF GOVERNMENTAL INDUSTRIAL HYGIENISTS (ACGIH)

ACGIH Limit Values	(1999) Threshold Limit Values for Chemical Substances and Physical Agents and Biological Exposure Indices

AMERICAN SOCIETY FOR TESTING AND MATERIALS (ASTM)

ASTM C 150	(1998a) Portland Cement
ASTM D 3273	(1994) Resistance to Growth of Mold on the Surface of Interior Coating in an Environmental Chamber
ASTM D 3274	(1995) Evaluating Degree of Surface Disfigurement of Paint Films by Microbial (Fungal or Algal) Growth or Soil and Dirt Accumulation
ASTM D 4214	(1998) Evaluating Degree of Chalking of Exterior Paint Films
ASTM D 4258	(1999) Surface Cleaning Concrete for Coating
ASTM E 514	**Water Permeance of Masonry**
ASTM c 67	**Water Repellancy Test**
ASTM E 96	**Moisture Vapor Transmission**
ASTM G53 (am#4)	**Weathering and UV Stability**

COMMERCIAL ITEM DESCRIPTIONS (CID)

CID A-A-1500	(Rev A; Notice 1) Sealer, Surface (Latex Block Filler)
CID A-A-1546	(Rev A; Canc. Notice 1)) Rubbing Varnish
CID A-A-1632	(Basic) Varnish, Asphalt

CID A-A-1788	(Canc. Notice 1)) Varnish, Oil; Interior
CID A-A-2246	(Rev B) Paint, Latex
CID A-A-2247	(Basic) Paint, Latex (Semigloss, Interior)
CID A-A-2248	(Basic) Paint, Latex, (Flat, Interior)
CID A-A-2335	(Canc. Notice 1) Sealer, Surface (Varnish Type, Wood and Cork Floors)
CID A-A-2336	(Rev A) Primer Coating (Alkyd, Exterior Wood, White and Tints)
CID A-A-2339	(Canc. Notice 1) Stain (Wood, Solvent-Dye Type)
CID A-A-2542	Sealer, Terrazzo and Concrete Floors, Waterbased
CID A-A-2834	(Basic) Urethane, Waterborne (Low VOC, Clear)
CID A-A-2867	Coating, Polyurethane, Single Component Moisture Cure, Alipathic
CID A-A-2962	(Rev A) Enamel, Alkyd (Metric)
CID A-A-2994	Primer Coating, Interior, for Walls and Wood

FEDERAL AVIATION ADMINISTRATION (FAA)

FAA AC 70/7460-1	(Rev J) Obstruction Marking and Lighting

FEDERAL SPECIFICATIONS (FS)

FS TT-C-542	(Rev E) Coating, Polyurethane, Oil-Free, Moisture Curing
FS TT-C-555	(Rev B; Am 1) Coating, Textured (for Interior and Exterior Masonry Surfaces)
FS TT-E-2784	(Rev A) Enamel (Acrylic-Emulsion, Exterior Gloss and Semigloss) (Metric)
FS TT-P-28	(Rev G; Notice 1) Paint, Aluminum, Heat Resisting (1200 Degrees F.)
FS TT-S-708	(Rev A; Am 2; Notice 1) Stain, Oil; Semi-Transparent, Wood, Exterior
FS TT-S-001992	(Basic; Notice 1) Stain, Latex, Exterior for Wood Surfaces

MAPLE FLOORING MANUFACTURERS ASSOCIATION (MFMA)

MFMA-03	(1997) Floor Sealer and Finish List and Specifications for Heavy Duty and

	Gymnasium Sealers and Finishes for Maple, Beech and Birch Floors: MFMA Floor Finish List Number 16

THE SOCIETY FOR PROTECTIVE COATINGS (SSPC)

SSPC Paint 5	(1995) Zinc Dust, Zinc Oxide and Phenolic Varnish Paint
SSPC Paint 18	(1991) Chlorinated Rubber Intermediate Coat Paint
SSPC Paint 20	(1991) Zinc-Rich Primers (Type I - "Inorganic" and Type II - "Organic")
SSPC Paint 23	(1991) Latex Primer for Steel surfaces
SSPC Paint 25	(1991) Red Iron Oxide, Zinc Oxide, Raw Linseed Oil and Alkyd Primer (Without Lead and Chromate Pigments)
SSPC SP 1	(1982) Solvent Cleaning
SSPC SP 2	(1995) Hand Tool Cleaning
SSPC SP 3	(1995) Power Tool Cleaning
SSPC SP 6/NACE 3	(1994) Commercial Blast Cleaning
SSPC SP 7/NACE 4	(1994) Brush-Off Blast Cleaning

1.2 SUBMITTALS

Government approval is required for submittals with a "G" designation; submittals not having a "G" designation are for information only. When used, a designation following the "G" designation identifies the office that will review the submittal for the Government. The following shall be submitted in accordance with Section 01330 SUBMITTAL PROCEDURES:

SD-03 Product Data

Paint G

The names, quantity represented, and intended use for the proprietary brands of materials proposed to be substituted for the specified materials when the required quantity of a particular batch is or less.

Mixing and Thinning G
ApplicationG
Manufacturer's current printed product description, material safety data sheets (MSDS) and technical data sheets for each coating system. Detailed mixing, thinning and application instructions, minimum and maximum application temperature, and curing and drying times between coats for epoxy, moisture-curing polyurethane, and liquid glaze coatings. Detailed application instructions for textured coatings shall be provided.

SD-04 Samples

Moisture-Curing Polyurethane G

A complete moisture-curing polyurethane system applied to a panel of the same material as that on which the coating will be applied in the work and for each color specified. The sample panels will be used for quality control in applying the system.

Paint G

While the material is at the site or source of supply, and at a time agreeable to the Contractor and the Contracting Officer, a sample of each color and batch, except for quantities of or less, shall be taken by random selection from the sealed containers by the Contractor in the presence of a representative of the Contracting Officer. The contents of the containers to be sampled shall be thoroughly mixed to ensure that the sample is representative. Samples shall be identified by designated name, specification number, manufacturer name and address, batch number, project contract number, intended use, and quantity involved.

Samples to be submitted for approval to:

Architectural Section
Design Branch
Fort Worth District

SD-06 Test Reports

Paint G

A statement as to the quantity represented and the intended use, plus the following test report for batches in excess of 200 L:

a. A test report showing that the proposed batch to be used meets specified requirements:

b. A test report showing that a previous batch of the same formulation as the batch to be used met specified requirements, plus, on the proposed batch to be used, a report of test results for properties of weight per liter, viscosity, fineness of grind, drying time, color, and gloss.

1.3 PACKAGING, LABELING, AND STORING

Paints shall be in sealed containers that legibly show the designated name, formula or specification number, batch number, color, quantity, date of manufacture, manufacturer's formulation number, manufacturer's directions including any warnings and special precautions, and name of manufacturer. Pigmented paints shall be furnished in containers not larger than 20 liters.

Paints and thinner shall be stored in accordance with the manufacturer's written directions and as a minimum stored off the ground, under cover, with sufficient ventilation to prevent the buildup of flammable vapors and at temperatures between 4 and 35 degrees C. Paints shall be stored on the project site or segregated at the source of supply sufficiently in advance of need to allow 30 days for testing.

1.4 APPROVAL OF MATERIALS

When samples are tested, approval of materials will be based on tests of the samples; otherwise, materials will be approved based on test reports furnished with them. If materials are approved based on test reports furnished, samples will be retained by the Government for testing should the materials appear defective during or after application. In addition to any other remedies under the contract the cost of retesting defective materials will be at the Contractor's expense.

1.5 ENVIRONMENTAL CONDITIONS

Unless otherwise recommended by the paint manufacturer, the ambient temperature shall be between 7 and 35 degrees C when applying coatings other than water-thinned, epoxy, and moisture-curing polyurethane coatings. Water-thinned coatings shall be applied only when ambient temperature is between 10 and 32 degrees C. Epoxy, and moisture-curing polyurethane coatings shall be applied only within the minimum and maximum temperatures recommended by the coating manufacturer. Moisture-curing polyurethane shall not be applied when the relative humidity is below 30 percent.

1.6 SAFETY AND HEALTH

Work shall comply with applicable Federal, State, and local laws and regulations, and with the ACCIDENT PREVENTION PLAN, including the Activity Hazard Analysis as specified in the CONTRACT CLAUSES. The Activity Hazard Analysis shall include analyses of the potential impact of painting operations on painting personnel and on others involved in and adjacent to the work zone.

1.6.1 Worker Exposures

Exposure of workers to hazardous chemical substances shall not exceed limits established by ACGIH Limit Values, or as required by a more stringent applicable regulation.

1.6.2 Toxic Compounds

Toxic products having ineffective physiological warning properties, such as no or low odor or irritation levels, shall not be used unless approved by the Contracting Officer.

1.6.3 Training

Workers having access to an affected work area shall be informed of the contents of the applicable material data safety sheets (MDSS) and shall be informed of potential health and safety hazard and protective controls associated with materials used on the project. An affected work area is one which may receive mists and odors from the painting operations. Workers involved in preparation, painting and clean-up shall be trained in the safe handling and application, and the exposure limit, for each material which the worker will use in the project. Personnel having a need to use respirators and masks shall be instructed in the use and maintenance of such equipment.

1.6.4 Coordination

Work shall be coordinated to minimize exposure of building occupants, other Contractor personnel, and visitors to mists and odors from preparation,

painting and clean-up operations.

PART 2 PRODUCTS

2.1 PAINT

The term "paint" as used herein includes emulsions, enamels, paints, stains, varnishes, sealers, cement-emulsion filler, and other coatings, whether used as prime, intermediate, or finish coat. Paint shall conform to the requirements listed in the painting schedules at the end of this section, except when the required amount of a material of a particular batch is 200 liters or less, an approved first-line proprietary paint material with similar intended formulation, usage and color to that specified may be used.

2.1.1 Colors and Tints

Colors shall be as selected from manufacturer's standard colors, as indicated in Section 09915 BUILDING COLOR AND FINISH SCHEDULE. Manufacturer's standard color is for identification of color only. Tinting of epoxy and urethane paints shall be done by the manufacturer. Stains shall conform in shade to manufacturer's standard color. The color of the undercoats shall vary slightly from the color of the next coat.

2.1.2 Mildewcide and Insecticide

Paint specified for all coats applied to surfaces in kitchen and dishwashing area shall contain a mildewcide that will not adversely affect the color, texture, or durability of the coating. The mildewcide shall be incorporated into the paint by the manufacturer and shall attain a surface disfigurement rating of 8 or greater when tested in accordance with ASTM D 3273 and evaluated in accordance with ASTM D 3274. Mercurial mildewcide shall not be used in interior paint. Insecticides shall not be used in paint.

2.1.3 Lead

Paints containing lead in excess of 0.06 percent by weight of the total nonvolatile content (calculated as lead metal) shall not be used.

2.1.4 Chromium

Paints containing zinc chromate or strontium chromate pigments shall not be used.

2.1.5 Volatile Organic Compound (VOC) Content

Paints shall comply with applicable federal, state and local laws enacted to insure compliance with Federal Clean Air Standards and shall conform to the restrictions of the local air pollution control authority.

PART 3 EXECUTION

3.1 PROTECTION OF AREAS NOT TO BE PAINTED

Items not to be painted which are in contact with or adjacent to painted surfaces shall be removed or protected prior to surface preparation and painting operations. Items removed prior to painting shall be replaced when painting is completed. Following completion of painting, workmen skilled in the trades involved shall reinstall removed items. Surfaces

contaminated by coating materials shall be restored to original condition.

3.2 SURFACE PREPARATION

Surfaces to be painted shall be clean and free of foreign matter before application of paint or surface treatments. Oil and grease shall be removed prior to mechanical cleaning. Cleaning shall be programmed so that dust and other contaminants will not fall on wet, newly painted surfaces. Exposed ferrous metals such as nail heads on or in contact with surfaces to be painted with water-thinned paints, shall be spot-primmed with a suitable corrosion-inhibitive primer capable of preventing flash rusting and compatible with the coating specified for the adjacent areas.

3.2.1 **Split-Face CMU Veneer, Smooth-Face CMU Veneer, and Brick Veneer(am#4)**

Exterior masonry surfaces shall be allowed to dry at least 30 days before water repellant sealing (painting). Surfaces shall be cleaned in accordance with \-ASTM D 4258-\. Glaze, efflorescence, laitance, dirt, grease, oil, asphalt, surface deposits of free iron and other foreign coatings shall be acid-etched or mechanically abraded as specified by the sealing manufacturer, rinsed with water, allowed to dry, and treated with the manufacturer's recommended conditioner prior to application of the first coat. Protection of areas not to be sealed (painted) is noted in paragraph 3.1.

3.2.2 Ferrous Surfaces

Ferrous surfaces including those that have been shop-coated, shall be solvent-cleaned or detergent-washed in accordance with SSPC SP 1. Surfaces that contain loose rust, loose mill scale, and other foreign substances shall be cleaned mechanically with hand tools according to SSPC SP 2, power tools according to SSPC SP 3 or by sandblasting according to SSPC SP 7/NACE 4. Shop-coated ferrous surfaces shall be protected from corrosion by treating and touching up corroded areas immediately upon detection.

3.2.3 Nonferrous Metallic Surfaces

Galvanized, aluminum and aluminum-alloy, lead, copper, and other nonferrous metal surfaces shall be solvent-cleaned or detergent-washed in accordance with SSPC SP 1.

3.2.4 Gypsum Board Surfaces

Gypsum board surfaces shall be dry and shall have all loose dirt and dust removed by brushing with a soft brush, rubbing with a cloth, or vacuum-cleaning prior to application of the first-coat material. A damp cloth or sponge may be used if paint will be water-based.

3.2.5 Mastic-Type Surfaces

Mastic-type surfaces shall be prepared by removing foreign material.

3.2.6 Plaster Surfaces

Plaster shall age at least 30 days before painting. Plaster shall be clean and free from loose matter and shall have an instrument-measured moisture content not exceeding 8 percent.

3.3 MIXING AND THINNING

When thinning is approved as necessary to suit surface, temperature, weather conditions, or application methods, paints may be thinned in accordance with the manufacturer's directions. When thinning is allowed, paints shall be thinned immediately prior to application with not more than 0.125 L of suitable thinner per liter. The use of thinner shall not relieve the Contractor from obtaining complete hiding, full film thickness, or required gloss. Thinning shall not cause the paint to exceed limits on volatile organic compounds. Paints of different manufacturers shall not be mixed.

3.3.1 Cement-Emulsion Filler Coat

Cement and aggregate shall be dry-mixed so that uniform distribution and intermixing are obtained. Mixing liquid and one-half of the total amount of water shall be premixed and added gradually to the white portland cement and aggregate with constant stirring until a thick, smooth material is obtained. Emulsion paint shall then be added to the mixture and stirred until uniformity is obtained. The blend shall have a thick, creamy consistency. The remainder of the water shall be added if necessary to obtain a material with adequate application properties. Blending resin emulsion or emulsion paint with any other component shall be done with caution; too rapid an agitation will cause air entrapment and foaming.

3.4 APPLICATION

Painting practices shall comply with applicable federal, state and local laws enacted to insure compliance with Federal Clean Air Standards. Unless otherwise specified or recommended by the paint manufacturer, paint may be applied by brush, roller, or spray. At the time of application, paint shall show no signs of deterioration. Uniform suspension of pigments shall be maintained during application. Each coat of paint shall be applied so dry film shall be of uniform thickness and free from runs, drops, ridges, waves, pinholes or other voids, laps, brush marks, and variations in color, texture, and finish. Hiding shall be complete. Rollers for applying paints and enamels shall be of a type designed for the coating to be applied and the surface to be coated. Special attention shall be given to insure that all edges, corners, crevices, welds, and rivets receive a film thickness equal to that of adjacent painted surfaces. Paints, except water-thinned types, shall be applied only to surfaces that are completely free of moisture as determined by sight or touch.

3.4.1 Ventilation

Affected areas shall be ventilated during paint application so that workers exposure to chemical substances shall not exceed limits as established by ACGIH Limit Values, or as required by a more stringent applicable regulation. Interior work zones having a volume of 280 cubic meters or less shall be ventilated at a minimum of 2 air exchanges per hour. Ventilation in larger work zones shall be maintained by means of mechanical exhaust. Solvent vapors shall be exhausted outdoors, away from air intakes and workers. Return air inlets in the work zone shall be temporarily sealed before start of work until the coatings have dried.

3.4.2 Respirators

Operators and personnel in the vicinity of operating paint sprayers shall wear respirators.

3.4.3 First Coat

The first coat on plaster, gypsum wallboard, and other surfaces shall include repeated touching up of suction spots or overall application of primer or sealer to produce uniform color and gloss. Excess sealer shall be wiped off after each application. The first coat on both faces of wood doors shall be applied at essentially the same time. Glazed doors and sashes shall be given the specified coating system within 3 weeks of the time they are glazed, but not before the glazing material has set; paint shall overlay glass about 1.78 mm all around. Each varnish coat shall be sanded lightly prior to application of subsequent coats.

3.4.4 Timing

Surfaces that have been cleaned, pretreated, and otherwise prepared for painting shall be given a coat of the specified first coat as soon as practical after such pretreatment has been completed, but prior to any deterioration of the prepared surface. Sufficient time shall elapse between successive coats to permit proper drying. This period shall be modified as necessary to suit weather conditions. Oil-based or oleoresinous solvent-type paints shall be considered dry for recoating when the paint feels firm, does not deform or feel sticky under moderate pressure of the thumb, and the application of another coat of paint does not cause the undercoat to lift or lose adhesion. Manufacturer's instructions for application, curing and drying time between coats of two-component systems shall be followed.

3.4.5 Stains

Stain shall be applied at the rate specified in the manufacturer's printed directions. Oil-type stain shall be applied by brushing with the grain for the full length of the board or course of siding.

3.4.6 Fillers

Concrete and masonry surface voids shall be filled; however, surface irregularities need not be completely filled. The dried filler shall be uniform and free of pinholes. Filler shall not be applied over caulking compound.

3.4.6.1 Cement-Emulsion Filler

Immediately before filler application, surfaces shall be dampened uniformly and thoroughly, with no free surface water visible, by several applications of potable water with a fog spray, allowing time between the sprayings for water to be absorbed. Cement-emulsion filler shall be scrubbed into the surface vigorously with a stiff-bristled brush having tampico or palmyra bristles not longer than 63 mm. At least 24 hours shall elapse before applying exterior emulsion paint over cement-emulsion filler. When the ambient temperature is over 29 degrees C, cement-emulsion filler surfaces shall be dampened lightly with a fog spray of potable water immediately prior to application of the subsequent paint coat.

3.4.6.2 Latex Filler

Latex filler, CID A-A-1500, shall be applied according to the manufacturer's instructions. Surface voids shall be filled The filler shall be allowed to dry the length of time specified by the manufacturer prior to applying successive coats of paint.Two coats may be necessary to cover

3.4.7 Textured Coating

Application of textured coating, FS TT-C-555, shall be as specified in the manufacturer's printed directions at a rate of 45-55 square feet per gallon..

3.4.8 Ferrous-Metal Primer

Primer for ferrous-metal shall be applied to ferrous surfaces to receive paint other than asphalt varnish prior to deterioration of the prepared surface. The semitransparent film applied to some pipes and tubing at the mill is not to be considered a shop coat, but shall be overcoated with the specified ferrous-metal primer prior to application of finish coats.

3.5 PIPE COLOR CODE MARKING

Pipes in exposed areas and in accessible pipe spaces shall be provided with color band and titles adjacent to all valves, except those provided at plumbing fixtures, at not more than 12 meter spacing on straight pipe runs, adjacent to change in direction, and on both sides where pipes pass through walls or floors. Color code marking shall be of the color listed in TABLE I and the size listed in TABLE II. The arrows shall be installed adjacent to each band to indicate the direction of flow in the pipe. The legends shall be printed in upper-case black letters as listed in TABLE I. Letter sizes shall be as listed in TABLE II. Marking shall be painted or applied using colored, pressure-sensitive adhesive markers of standard manufacture. Paint shall be as specified for insulated and uninsulated piping.

Uninsulated pipes in the mechanical rooms shall be painted and labled. Pipe paint color shall be the color indicated in the "Band" column of Table I. Pipe lables and arrows shall be as indicated in Table I. Uninsulated stainless steel and plastic piping shall not be painted, but shall be color coded in accordance with Table I. Insulated pipe with PVC insulation jacket cover need not be painted, but shall be color coded in accordance with Table I.

Concrete equipment pads in the mechanical rooms shall be touched-up as necessary, after equipment installation. Color of the equipment pad shall be gray.

TABLE I. COLOR CODES FOR MARKING PIPE

Material	Band	Letters and Arrow*	Legend
Cold water (potable)	Green	White	POTABLE WATER
Fire protection water	Red	White	FIRE PR. WATER
Fire Sprinkler Water	Red	White	FIRE SPR. WATER
Hot water (domestic)	Green	White	H.W.
Hot water recirculating (domestic)	Green	White	H.W.R.
Heating water supply	Yellow	Black	H.T.W.S.
Heating water return	Yellow	Black	H.T.W.R.
Boiler feed water	Yellow	Black	B.F.
Condenser water supply	Green	White	COND. W.S.
Condenser water return	Green	White	COND. W.R.
Chilled water supply	Green	White	C.H.W.S.
Chilled water return	Green	White	C.H.W.R.
Treated water	Green	White	TR. WATER

TABLE I. COLOR CODES FOR MARKING PIPE

Material	Band	Letters and Arrow*	Legend
Chemical feed	Yellow	Black	CH. FEED
Compressed air	Blue	White	COMP. AIR
Natural gas	Yellow	Black	NAT. GAS

TABLE II. COLOR CODE MARKING SIZES

Outside Diameter of Pipe Covering (mm)	Width of Color Band (mm)	Arrow Length x Width (mm)	Size of Legend Letters and Numerals (mm)
Less than 38	200	200 x 57	13
38 to 60	200	200 x 57	19
60 to 150	300	200 x 57	31
200 to 225	600	300 x 110	63
Over 250	800	300 x 115	88

3.6 MISCELLANEOUS PAINTING

3.7 SURFACES TO BE PAINTED

Surfaces listed in the painting schedules at the end of this section, other than those listed in paragraph SURFACES NOT TO BE PAINTED, shall be painted as scheduled.

3.8 SURFACES NOT TO BE PAINTED

Surfaces in the following areas shall not to be painted: Exterior sheet metalwork (except galvanized), Exterior poured concrete, Concrete floors, Exterior and interior aluminum and stainless steel, Aluminum or galvanized roofing and siding sheets, Exterior caulking and sealants, Door and window hardware unless specifically specified to be painted in Section 08700-BUILDERS HARDWARE, Sprinkler heads and other fire detection elements, Safety nosings, Interior and exterior signs, walls and ceilings in crawl spaces, Aluminum or sized vapor barrier jacketing over insulated pipes in unexposed locations that do not require color coding.. In addition, surfaces of hardware, fittings, and other factory finished items shall not be painted.

3.9 CLEANING

Cloths, cotton waste and other debris that might constitute a fire hazard shall be placed in closed metal containers and removed at the end of each day. Upon completion of the work, staging, scaffolding, and containers shall be removed from the site or destroyed in an approved manner. Paint and other deposits on adjacent surfaces shall be removed and the entire job left clean and acceptable.

3.10 PAINTING SCHEDULES

The following painting schedules identify the surfaces to be painted and prescribe the paint to be used and the number of coats of paint to be applied. Contractor options are indicated by ------or------ between

optional systems or coats.

EXTERIOR PAINTING SCHEDULE

Surface	First Coat	Second Coat	Third Coat
Ferrous metal unless otherwise specified	SSPC Paint 5	CID A-A-2962 Type I Class Grade C	CID A-A-2962 Type 1 Class Grade C
	SSPC Paint 25	CID A-A-2962 Type I Class A Grade C	CID A-A-2962 Type 1 Class A Grade C
	SSPC Paint 23	FS TT-E-2784 Type I	FS TT-E-2784 Type I
Galvanized metal.	FS TT-E-2784 Type III	FS TT-E-2784 Type I	FS TT-E-2784 Type A
-Split-Face Concrete masonry units,	Sealer ASTM E 514	Sealer ASTM E 514	None
Smooth-Face Concrete Masonry Units.	ASTM C 67 ASTM E 96	ASTM C 67 ASTM E 96	
Brick Veneer	ASTM G 53	ASTM G 53	

INTERIOR PAINTING SCHEDULE

Surface	First Coat	Second Coat	Third Coat
Plaster, gypsum board, concrete, and unglazed concrete with masonry units not requiring a not requiring a smooth finish, unless otherwise specified	CID A-A-2994 Type II	CID A-A-2246	CID A-A-2246 on gypsum board faced recycled paper
		or	
		CID A-A-2247	CID A-A-2247 on gypsum board faced with recycled paper
		or	
		CID A-A-2248	CID A-A-2248 on gypsum board faced with recycled paper
Plaster and gypsum board: in food-preparation food-serving restrooms and laundry areas, unless otherwise specified.	CID A-A-2994 Type II	FS TT-E-2784 Type I	FS TT-E-2784 Type I on gypsum board faced with recycled paper
Concrete masonry units, plaster, and gypsum board: for walls in heavy traffic areas in space as follows:	CID A-A-1500	CID A-A-2994 Type II	CID A-A-2246
			-----or------
			CID A-A-2247
Ferrous Metal unless otherwise specified	SSPC Paint 25	CID A-A-2962 Type I Class A Grade C	CID A-A-2962 Type I Class A Grade C
	SSPC Paint 23	FS TT-E-2784 Type I	FS TT-E-2784 Type I

	CID A-A-2867	CID A-A-2867	None
Ferrous metal factory-primed mechanical and electrical equipment.	Two coats of paint as recommended by the equipment manufacturer		None
Galvanized metal:	FS TT-E-2784 Type III	FS TT-E-2784 Type A	None
	SSPC Paint 5	CID A-A-2962 Type I Class A Grade C	CID A-A-2962 Type I Class A Grade C
	SSPC Paint 25	CID A-A-2962 Type I Class A Grade C	CID A-A-2962 Type I Class A Grade C
	SSPC Paint 23	FS TT-E-2784 Type I	FS TT-E-2784 Type I
Wood: stain and varnish finishes	Commercially Type I Class I	CID A-A-1788 Type I Class I In addition a fourth coat of CID A-A-1788 Type [_____] Class I	CID A-A-1788
	CID A-A-2339	CID A-A-2834 Type I Class A In addition a fourth coat of CID A-A-2834 Type I Class A	CID A-A-2834 Type I Class A

-- End of Section --

SECTION 09915

COLOR SCHEDULE
06/93
AMENDMENT 0001
AMENDMENT 0004

PART 1 GENERAL

1.1 GENERAL

This section covers only the color of the exterior and interior materials and products that are exposed to view in the finished construction. The word "color" as used herein includes surface color and pattern. Requirements for quality and method of installation are covered in other appropriate sections of the specifications. Specific locations where the various materials are required are shown on the drawings. Items not designated for color in this section may be specified in other sections. When color is not designated for items, the Contractor shall propose a color for approval.

1.2 SUBMITTALS

Government approval is required for submittals with a "G" designation; submittals not having a "G" designation are for information only. When used, a designation following the "G" designation identifies the office that will review the submittal for the Government. The following shall be submitted in accordance with Section 01330 SUBMITTAL PROCEDURES:

SD-04 Samples

Color Schedule; G

THREE (3) sets of color boards, 60 days after the Contractor is given Notice to proceed, complying with the following requirements:

a. Color boards shall reflect all actual finish textures, patterns, and colors required for this contract.

b. Materials shall be labeled with the finish type, manufacturer's name, pattern, and color reference.

c. Samples shall be on size A4 or 8-1/2 by 11 inch boards with a maximum spread of size A1 or 25-1/2 by 33 inches for foldouts.

d. Samples for this color board are required in addition to samples requested in other specification sections.

e. Color boards shall be submitted to the following addresses for approval:

DESIGN BRANCH
ARCHITECTURAL SECTION
FORT WORTH DISTRICT

PART 2 PRODUCTS

2.1 REFERENCE TO MANUFACTURER'S COLOR

Where color is shown as being specific to one manufacturer, an equivalent color by another manufacturer may be submitted for approval. Manufacturers and materials specified are not intended to limit the selection of equal colors from other manufacturers.

2.2 COLOR SCHEDULE

The color schedule lists the colors, patterns and textures required for exterior and interior finishes, including both factory applied and field applied colors.

2.2.1 Exterior Walls

Exterior wall colors shall apply to exterior wall surfaces including recesses at entrances and projecting vestibules. Conduit shall be painted to closely match the adjacent surface color. Wall color shall be provided to match the colors listed below.

a. Brick:
ACME; DOE SKIN
AM4 SHALL BE SEALED WITH CHEMPROBE, PRIM-A-PELL 200.

b. Mortar: Standard

d. **AM4 SPLIT FACE**: **FEATHERLITE 707, LONESTAR GRAY**

f. Insulation and Finish System:
STO; 20 908

2.2.2 Exterior Trim

Exterior trim shall be provided to match the colors listed below.

a. Doors and Door Frames:
AM1
T101; SHALL MATCH GRAHAM ARCHITECTURAL PRODUCTS, RIVER ROUGE RED
T202; SHALL MATCH GRAHAM ARCHITECTURAL PRODUCTS, ANTIQUE BRONZE (MED)

b. Windows (mullion, muntin, sash, trim, and sill):
AM1
D101; GRAHAM ARCHITECTURAL PRODUCTS; RIVER ROUGE RED
D202; GRAHAM ARCHITECTURAL PRODUCTS; ANTIQUE BRONZE (MED)

d. Fascia, Metal Siding, and Exposed Accessories

MBCI; **AM4 MEDIUM BRONZE**

e. Downspouts, Gutter, Louvers, and Flashings:
TO MATCH STANDING SEAM ROOF; MBCI, ALMOND

f. Handrails:
AM1 TO MATCH SHERWIN WILLIAMS SUNDRIED TOMATO RB SW2915

g. Soffits and Ceilings:
STO; 20 908

h. Signage:
BASE STANDARD

i. Overhangs:
TO MATCH STANDING SEAM ROOF; MBCI, **AM4 MEDIUM BRONZE**

j. Caulking and Sealants:
TO MATCH ADJACENT MATERIAL

2.2.3 Exterior Roof

Roof color shall apply to exterior roof surfaces including sheet metal flashings and copings, mechanical units, roof trim, pipes, conduits, electrical appurtenances, and similar items. Roof color shall be provided to match the colors listed below.

a. Metal:
MBCI; **AM4 MEDIUM BRONZE**

2.2.4 Interior Floor Finishes

Flooring materials shall be provided to match the colors listed below.

b. Carpet Tile:
F101; INTERFACE, WIND, CANYON 4240
F102; INTERFACE, EARTH, CANYON 4224

c. **AM1** Vinyl Sheet**/Composition** Tile:
F201; ARMSTRONG, PERSPECTIVE, 34313 CANYON GOLD 600 X 600mm
F202; ARMSTRONG, IMPERIAL TEXTURE STANDARD 51809 DESERT BEIGE

g. Quarry Tile:
AM1
F501; DAL-TILE, **DIABLO RED, QT01, ABRASIVE**

h. Ceramic Tile:
AM1

F301; DAL-TILE, KEYSTONES, SPICE 50 X 50mm **D022**

i. Porcelain Tile:
AM1
F401; DAL-TILE - TAJAH, PANTERA BEIGE TJ02 **300x300mm**
F402; DAL-TILE - TAJAH, AUTUMN MIST, RED TS 95 (BAND)
F403; DAL-TILE - GOLD RUSH, GOLDEN NUGGET 5208 ABRASIVE
F404; DAL-TILE - BASALTO, BEIGE BS02, 300x300mm
F405; DAL-TILE - BASALTO, BROWN BS05, 300x300mm

j. Grout:
AM1
FOR F401/F402 - MAPEI, IVORY,MARFILL 39
FOR F403 - MAPEI, CHAMOIS 05
FOR F404/F405 - MAPEI, CHAMOIS 05
FOR F501 - MAPEI, TERRA COTTA 37

n. Concrete: STANDARD GRAY, BROOM FINISH.

2.2.5 Interior Base Finishes

Base materials shall be provided to match the colors listed below.

a. Resilient Base and Edge Strips:
AM1
B101; JOHNSONITE, TIGHTLOCK, **CORONADO 65**
B102; JOHNSONITE, **COVE, SILK 129**

b. Quarry Tile:
AM1
B401; DAL-TILE, **DIABLO RED, Q3565**

c. Ceramic Tile:
AM1
B201; DAL-TILE, KEYSTONES, MB-4C, **SPICE D022**

d. Porcelain Tile:
AM1
B301; DAL-TILE - TAJAH, PANTERA BEIGE **TJ02**
B302; DAL-TILE - GOLD RUSH GOLDEN NUGGETT **5208**
B303; DAL-TILE - BASALTO, BROWN S36C9TM 150x300mm

e. Grout:
AM1
FOR B201 - MAPEI, CHAMOIS 05
FOR B301/B303 - MAPEI, CHAMOIS 05
FOR B303 - MAPEI TERRA COTTA 37

2.2.6 Interior Wall Finishes

Interior wall color shall apply to the entire wall surface, including reveals, vertical furred spaces, grilles, diffusers, electrical and access panels, and piping and conduit adjacent to wall surfaces unless otherwise specified. Items not specified in other paragraphs shall be painted to match adjacent wall surface. Wall materials shall be provided to match the colors listed below.

a. Paint:
   AM1
   W101; ZOLATONE, METAL, 2ML-C1009
   W102; POLYMYX, P4M-C112**4**
   W103; SHERWIN WILLIAMS, **SUNDEW SW1121**
   W701; SHERWIN WILLIAMS, SUNDEW SW1121

b. Vinyl Wall Covering:
   W201; VICRTEX, SUNDANCE, METALLIC ROAN 3D21-58
   W202; EVANS & BROWN, NEBULA, BAROQUE PERAL N421-30
   W203; EVANS & BROWN, FACADE, CHAI TEA F521-44

d. Ceramic Tile:
   AM1
   W401; DAL-TILE; KEYSTONES, HONEY D440 50x50mm (FIELD)
   W402; DAL-TILE; KEYSTONES, SPICE D022 50x50mm (BAND)
   W403; DAL-TILE; FLAG MURAL

e. Ceramic Tile Grout:
   AM1
   MAPEI - CHAMOIS

f. Acoustical Wall PANELS:
   W501; PANEL SOLUTIONS
   FABRIC; MAHARAM, TEK-WALL, FISSION 395870

g. **AM 1 PORCELAIN TILE**
   W301; DAL-TILE, TAJAHM PANTERA BEIGE TJ02 300x300mm
   W302; DAL-TILE, TAJAH, AUTUMN MIST RED TS95
   W303; DAL-TILE, GOLD RUSH, GOLDEN NUGGET 5208
   W304; DAL-TILE, GOLD RUSH, 5292 DECORATIVE BORDER
   W305; DAL-TILE, BASALTO, BEIGE BS02 150x150mm
   W306; DAL-TILE, BASALTO, BROWN BS05 150x150mm

h. **AM1 GROUT FOR PORCELAIN TILE**
   FOR W301/W302 - MAPEI, IVORY/MARFILL 39
   FOR W303/W304 - MAPEI, CHAMOIS 05
   FOR W305/W306 - AMPEI, CHAMOIS 05

2.2.7 Interior Ceiling Finishes

Ceiling colors shall apply to ceiling surfaces including soffits, furred down areas, grilles, diffusers, registers, and access panels. Ceiling color shall also apply to joist, underside of roof deck, and conduit and piping where joists and deck are exposed and required to be painted. Ceiling materials shall be provided to match the colors listed below.

a. Acoustical Tile and Grid:
AM1
C301; ARMSTRONG - **ULTIMA, BEVELED TEGLAR W/SUPRAFINE 14mm EXPOSED TEE GRID/ WHITE**

b. Paint:
AM1
C201; SHERWIN WILLIAMS, **ECHELON ECRU SW1122**
C401; SHERWIN WILLIAMS, **ECHELON ECRU SW1122**

c. **AM1 METAL PAN CEILING**
C501; ARMSTRONG, METALWORKS, VECTOR WHITE

2.2.8 Interior Trim

Interior trim shall be provided to match the colors listed below.

a. Doors:
AM1
D201; GRAHAM ARCHITECTUAL PRODUCTS, RIVER ROUGE RED
D202; GRAHAM ARCHITECTURAL PRODUCTS, ANTIQUE BRONZE (MED)

b. Door Frames:
AM1
T201; GRAHAM ARCHITECTURAL PRODUCTS, RIVER ROUGE RED
T202; GRAHAM ARCHITECTURAL PRODUCTS, ANTIQUE BRONZE (MED)

c. Windows (mullion, muntin, sash, trim, and stool):
GRAHAMS ARCH. PRODUCTS, RIVER ROUGE RED

d. Window Sills:
AM1
SHERWIN WILLAIMS, **SUNDEW SW1121**

2.2.9 Interior Window Treatment

Window treatments shall be provided to match the colors listed below.

a. Horizontal Blinds:
AM1
LEVOLOR, **25MM, CHAMOIS 207**

b. Window Shades:
AM1
MECHO, **BLACK/BROWN 2104, BASKETWEAVE**

2.2.10 Interior Miscellaneous

Miscellaneous items shall be provided to match the colors listed below.

a. Toilet Partitions and Urinal Screen:
AM1
SANTANA, **POLY-MARBLE 525**

b. Plastic Laminate:
AM1
SOLDIER COMMUNITY BUILDING
LAUNDRY ROOM COUNTER
PL-1; WILSONART, **BEIGE NEBULA 4624-60**
CABINETS IN STORAGE A111
PL-2; WILSONART, NATURAL TIGRES 4669-60
BARRACKS
KITCHEN CABINET/DRESSING AREA
PL-3; WILSONART, GILDED MARQUERTRY 7918-38

g. Corner Guards:
AM1
KENMARK
CLEAR ARCYLIC

h. Wall Switch Handles and Standard Receptacle Bodies:
IVORY

i. Electrical Device Cover Plates and Panels:
IVORY

j. Casework:

AM1
SOLDIER COMMUNITY BUILDING
RECEPTION DESK/**ENTERTAINMENT CABINET** LOBBY A102
FRONT; WOOD STAINED TO MATCH SHERWIN WILLIAMS WOOD CLASSICS
BURNISHED WALNUT SW3119-K
COUNTERTOP; US STONE, AVANZA, ABRUZZO 131

KITCHEN CABINET
FRONT; WOOD STAINED TO MATCH SHERWIN WILLIAMS WOOD CLASSICS
BURNISHED WALNUT SW3119-K
COUNTERTOP; US STONE, AVANZA, ABRUZZO 131

SHELVES TO BE PAINTED; SHERWIN WILLIAMS **SUNDEW SW1121**

MAILROOF SHELF ROOM A113
18 GAUGE STAINLESS STEEL

BARRACKS
KITCHEN CABINET/DRESSING AREA
FRONT; WOOD STAINED TO MATCH SHERWIN WILLIAMS WOOD CLASSICS
BURNISHED WALNUT SW3119-K
COUNTERTOP; WILSONART, GILDED MARQUERTRY 7918-38
SHELVES TO BE PAINTED TO MATCH SHERWIN WILLIAMS SUNDDEW SW1121

COMPANY OPERATION BUILDINGS
RECEPTION DESK/LOBBY
FRONT; WOOD STAINED TO MATCH SHERWIN WILLIAMS WOOD CLASSICS
BURNISHED WALNUT SW3119-K
COUNTERTOP; US STONE, AVANZA, ABRUZZO 131
SHELVES TO BE PAINTED TO MATCH SHERWIN WILLIAMS SUNDEW SW1121

AM4

2.2.11 ROOM COLOR AND FINISH SCHEDULE

AREA: VESTIBULE A101

BASE	FLOOR	A WALL	B WALL	C WALL	D WALL	CEILING
B301	F401	W6/OPEN	W6/OPEN	W6/OPEN	W6/OPEN	C401

AREA: LOBBY A102

BASE	FLOOR	A WALL	B WALL	C WALL	D WALL	CEILING
B301	F101	W101	W101	W101	W101	C201
	F401					C301
	F402					

NOTE: PORCELAIN TILE TO BE INSTALLED AT A 45 DEGREE ANGLE.
SEE ARCH DRWG. FOR CEILING FINISH PLACEMENT.
SEE ARCH DRWG. FOR FLOOR FINISH PLACEMNT.

AREA: OFFICE A103

BASE	FLOOR	A WALL	B WALL	C WALL	D WALL	CEILING
B101	F101	W101	W101	W101	W101	C301

AREA: H.C.TOILET A104

BASE	FLOOR	A WALL	B WALL	C WALL	D WALL	CEILING
B301	F401	W301	W301	W301	W301	C401
		W302	W302	W302	W302	

AREA: TOILET A105

BASE	FLOOR	A WALL	B WALL	C WALL	D WALL	CEILING
B301	F401	W301	W301	W301	W301	C401
		W302	W302	W302	W302	

AREA: JANITOR A106

BASE	FLOOR	A WALL	B WALL	C WALL	D WALL	CEILING
B201	F301	W401	W401	W401	W401	C401
		W402	W402	W402	W402	

AREA: VENDING A107

BASE	FLOOR	A WALL	B WALL	C WALL	D WALL	CEILING
B301	F401	W201	W201	W201	W201	C301

AREA: CLOSET A108

BASE	FLOOR	A WALL	B WALL	C WALL	D WALL	CEILING
B101	F102	W103	W103	W103	W103	C201

AREA: ACTIVITIES ROOM A109

BASE	FLOOR	A WALL	B WALL	C WALL	D WALL	CEILING
B101	F101	W501	W501	W501	W501	C501

NOTE: ACOUSTICAL WALL PANELS TO BE INSTALLED FLUSH SIDE BY SIDE AND FLOOR TO CEILING. TO BE FIELD MEASURED FOR CORRECT INSTALLATION.

AREA: STORAGE A111

BASE	FLOOR	A WALL	B WALL	C WALL	D WALL	CEILING
B101	CONC	W103	W103	W103	W103	C301

AREA: VESTIBULE A112

BASE	FLOOR	A WALL	B WALL	C WALL	D WALL	CEILING
B301	F401	W201	W201	W201	W201	C401

AREA: MAIL ROOM A113

BASE	FLOOR	A WALL	B WALL	C WALL	D WALL	CEILING
B301	F401	W101	W101	W101	W101	C401

AREA: KITCHEN A114

BASE	FLOOR	A WALL	B WALL	C WALL	D WALL	CEILING
B301	F401	W202	W202	W202	W202	C401

AREA: LAUNDRY A115

BASE	FLOOR	A WALL	B WALL	C WALL	D WALL	CEILING
B303	F404	W301	W301	W301	W301	C501
	F405	W403				

**NOTE: PORCELAIN TILE TO BE INSTALLED AT A 45 DEGREE ANGLE
SEE ARCH. DRWG FOR WALL PATTERN
FLAG MURAL BY DAL-TILE**

AREA: LAUNDRY SERVICE A116

BASE	FLOOR	A WALL	B WALL	C WALL	D WALL	CEILING
B101	CONC	W103	W103	W103	W103	C401

AREA: MECHANICAL A117

BASE	FLOOR	A WALL	B WALL	C WALL	D WALL	CEILING
NONE	CONC	W701	W701	W701	W701	C201

AREA: MUD ROOM A118

BASE	FLOOR	A WALL	B WALL	C WALL	D WALL	CEILING
B301	F401	W301	W301	W301	W301	C301

AREA: COMM A119

BASE	FLOOR	A WALL	B WALL	C WALL	D WALL	CEILING
NONE	CONC	W701	W701	W701	W701	C201

AREA: ELEC A120

BASE	FLOOR	A WALL	B WALL	C WALL	D WALL	CEILING
NONE	CONC	W701	W701	W701	W701	C201

AREA: STORAGE A201

BASE	FLOOR	A WALL	B WALL	C WALL	D WALL	CEILING
NONE	CONC	W701	W701	W701	W701	C201

BARRACKS

AREA: LIVING/SLEEPING

BASE	FLOOR	A WALL	B WALL	C WALL	D WALL	CEILING
B101	F201	W103	W103	W103	W103	C201

AREA: CLOSET

BASE	FLOOR	A WALL	B WALL	C WALL	D WALL	CEILING
B101	F201	W103	W103	W103	W103	C201

AREA: SERV AREA

BASE	FLOOR	A WALL	B WALL	C WALL	D WALL	CEILING
B302	F403	W103	W103	W103	W103	C201

AREA: BATH RM

BASE	FLOOR	A WALL	B WALL	C WALL	D WALL	CEILING
B302	F403	W303 W304	W103	W103	W103	C401

NOTE: SEE ARCH DRWG FOR PORCELAIN WALL TILE PLACEMENT

AREA: DRESSING RM

BASE	FLOOR	A WALL	B WALL	C WALL	D WALL	CEILING
B302	F403	W304	W304	W304	W304	C401

AREA: COMM

BASE	FLOOR	A WALL	B WALL	C WALL	D WALL	CEILING
NONE	CONC	W703	W703	W703	W703	C401

AREA: ELEC

BASE	FLOOR	A WALL	B WALL	C WALL	D WALL	CEILING
NONE	CONC	W703	W703	W703	W703	C401

COMPANY OPERATIONS BUILDING

AREA: VESTIBULE C101,C201,C301,C401,C501

BASE	FLOOR	A WALL	B WALL	C WALL	D WALL	CEILING
B301	F403	-	W102	-	W102	C301

AREA: WAITING C102,C202,C302,C402,C502

BASE	FLOOR	A WALL	B WALL	C WALL	D WALL	CEILING

B301	F403	W102	W102	W102	W102	C301

AREA: ADMIN C103,C203,C303,C403,C503

BASE	FLOOR	A WALL	B WALL	C WALL	D WALL	CEILING
B101	F101	-	W201	W201	W201	C301

AREA: TRAINING OFFICE C104,C204,C304,C404,C504

BASE	FLOOR	A WALL	B WALL	C WALL	D WALL	CEILING
B101	F101	W102	W102	W102	W102	C301

AREA: FIRST SERGEANT C105,C205,C305,C405,C505

BASE	FLOOR	A WALL	B WALL	C WALL	D WALL	CEILING
B101	F101	W102	W102	W102	W102	C301

AREA: EXEC. OFFICER C106,C206,C306,C406,C506

BASE	FLOOR	A WALL	B WALL	C WALL	D WALL	CEILING
B101	F101	W102	W102	W102	W102	C301

AREA: COMMANDER C107,C207,C307,C407,C507

BASE	FLOOR	A WALL	B WALL	C WALL	D WALL	CEILING
B101	F101	W102	W102	W102	W102	C301

AREA: STORAGE C108,C208,C308,C408,C508

BASE	FLOOR	A WALL	B WALL	C WALL	D WALL	CEILING
B101	F101	W103	W103	W103	W103	C201

AREA: PLATOON OPEN OFFICE C109,C209,C309,C409,C509

BASE	FLOOR	A WALL	B WALL	C WALL	D WALL	CEILING
B101	F101	W102	W102	W102	W102	C301

AREA: PLATOON OFFICE C110,C210,C310,C410,C510

BASE	FLOOR	A WALL	B WALL	C WALL	D WALL	CEILING
B101	F102	W102	W102	W102	W102	C301

AREA: PLATOON OFFICE C111,C211,C311,C411,C511

BASE	FLOOR	A WALL	B WALL	C WALL	D WALL	CEILING
B101	F102	W102	W102	W102	W102	C301

AREA: ELEC. C112,C212,C312,C412,C512

BASE	FLOOR	A WALL	B WALL	C WALL	D WALL	CEILING
B102	F202	W103	W103	W103	W103	C201

AREA: JANITOR C113,C213,C313,C413,C513

BASE	FLOOR	A WALL	B WALL	C WALL	D WALL	CEILING
B201	F301	W401	W401	W401	W401	C201
		W402	W402	W402	W402	

NOTE: WALL TILE TO BE INSTALLED AT A 45 DEGREE ANGLE

AREA: TLT/SHO C114,C214,C314,C414,C514

BASE	FLOOR	A WALL	B WALL	C WALL	D WALL	CEILING
B301	F403	W304	W304	W304	W302	C401

NOTE: WALL TILE TO BE INSTALLED AT A 45 DEGREE ANGLE

AREA: TLT/SHO C115,C215,C315,C415,C515

BASE	FLOOR	A WALL	B WALL	C WALL	D WALL	CEILING
B301	F403	W304	W304	W304	W302	C401

NOTE: WALL TILE TO BE INSTALLED AT A 45 DEGREE ANGLE

AREA: MECH. C116,C216,C316,C416,C516

BASE	FLOOR	A WALL	B WALL	C WALL	D WALL	CEILING
NONE	CONC	W103	W103	W103	W103	C201

AREA: CORRIDOR C117,C217,C317,C417,C517

BASE	FLOOR	A WALL	B WALL	C WALL	D WALL	CEILING
B301	F403	W202	W202	W202	-	C301

AREA: CORRIDOR C118,C218,C318,C418,C518

BASE	FLOOR	A WALL	B WALL	C WALL	D WALL	CEILING
B301	F403	W202	-	-	W201	C301

AREA: STORAGE C119,C219,C319,C419,C519

BASE	FLOOR	A WALL	B WALL	C WALL	D WALL	CEILING
B102	F101	W103	W103	W103	W103	C201

AREA: CONFERENCE RM C120,C220,C320,C420,C520

BASE	FLOOR	A WALL	B WALL	C WALL	D WALL	CEILING
B101	F101	W101	W501	W501	W501	C301

AREA: STORAGE C122,C222,C322,C422,C522

BASE	FLOOR	A WALL	B WALL	C WALL	D WALL	CEILING
B101	F102	W102	W102	W102	W102	C201

AREA: VESTIBULE C123,C223,C323,C423,C523

BASE	FLOOR	A WALL	B WALL	C WALL	D WALL	CEILING
B301	F403	W304	W304	W304	W304	C201

AREA: WOMENS C124,C224,C324,C424,C524

BASE	FLOOR	A WALL	B WALL	C WALL	D WALL	CEILING
B301	F403	W304	W304	W304	W304	C401

AREA: VESTIBULE C125,C225,C325,C425,C525

BASE	FLOOR	A WALL	B WALL	C WALL	D WALL	CEILING
B301	F403	W304	W304	W304	W304	C201

AREA: LOCKERS C126,C226,C326,C426,C526

BASE	FLOOR	A WALL	B WALL	C WALL	D WALL	CEILING
B301	F403	W304	W304	W304	W304	C301

AREA: MENS C127,C227,C327,C427,C527

BASE	FLOOR	A WALL	B WALL	C WALL	D WALL	CEILING
B302	F403	W304	W304	W304	W304	C401

AREA: COMM C128,C228,C328,C428,C528

BASE	FLOOR	A WALL	B WALL	C WALL	D WALL	CEILING
NONE	CONC	W103	W103	W103	W103	C201

AREA: COMMO, STORAGE C129,C229,C329,C429,C529

BASE	FLOOR	A WALL	B WALL	C WALL	D WALL	CEILING
NONE	CONC	-	-	W103	W103	C201

AREA: NBC STORAGE C130,C230,C330,C430,C530

BASE	FLOOR	A WALL	B WALL	C WALL	D WALL	CEILING
NONE	CONC	W701	-	-	W701	C201

AREA: TA-50 GEAR C131,C231,C331,C431,C531

BASE	FLOOR	A WALL	B WALL	C WALL	D WALL	CEILING
NONE	CONC	W701	-	W701	W701	C201

AREA: EQUIP. MAINT. C132,C232,C332,C432,C532

BASE	FLOOR	A WALL	B WALL	C WALL	D WALL	CEILING
NONE	CONC	W701	W701	W701	W701	C201

AREA: GENERAL STORAGE C133,C233,C333,C433,C533

BASE	FLOOR	A WALL	B WALL	C WALL	D WALL	CEILING
NONE	CONC	-	W103	W701	-	C201

AREA: ARMS VAULT C134,C234,C334,C434,C534

BASE	FLOOR	A WALL	B WALL	C WALL	D WALL	CEILING
NONE	CONC	W701	W701	W701	W701	C201

AREA: UNIT STORAGE C135,C235,C335,C435,C535

BASE	FLOOR	A WALL	B WALL	C WALL	D WALL	CEILING
NONE	CONC	W701	W701	-	-	C201

DINING

AREA: VESTIBULE D101

BASE	FLOOR	A WALL	B WALL	C WALL	D WALL	CEILING
B303	F404	W305	W501	W305	W501	C201
	F405	W306		W306		

NOTE: SEE ARCH. DRWG FOR WALL FINISHES PLACEMENT

AREA: CARRY-0UT D102

BASE	FLOOR	A WALL	B WALL	C WALL	D WALL	CEILING
B303	F404	-	W701	W701	W701	C301
	F405					

NOTE: PORCELAIN TILE TO HAVE A BORDER TILE, F405. PATTERN SHALL BE TWO TILES OF BEIGE, F405, FROM WALL. FIELD TILE TO BE F404.

AREA: CARRY-OUT KITCHEN D103

BASE	FLOOR	A WALL	B WALL	C WALL	D WALL	CEILING
B401	F501	W701	W701	W701	W701	C401

AREA: CARRY-OUT STORAGE D104

BASE	FLOOR	A WALL	B WALL	C WALL	D WALL	CEILING
B401	F501	W701	W701	W701	W701	C2401

AREA: CAN WASH D105

BASE	FLOOR	A WALL	B WALL	C WALL	D WALL	CEILING
NONE	CONC	W701	W701	W701	W701	C201

AREA: STORAGE D106

BASE	FLOOR	A WALL	B WALL	C WALL	D WALL	CEILING
B201	F301	W701	W701	W701	W701	C201

AREA: JANITOR D107

BASE	FLOOR	A WALL	B WALL	C WALL	D WALL	CEILING

B201	F301	W401	W401	W401	W401	C201
		W402	W402	W402	W402	

AREA: CORRIDOR D108

BASE	FLOOR	A WALL	B WALL	C WALL	D WALL	CEILING
B401	F501	W701	W701	W701	W701	C401

AREA: WOMEN D109

BASE	FLOOR	A WALL	B WALL	C WALL	D WALL	CEILING
B303	F404	W305	W305	W305	W305	C201
	F405	W306	W306	W306	W306	

NOTE: PORCELAIN TILE TO HAVE A BORDER TILE, F405. PATTERN SHALL BE TWO TILES OF BEIGE, F405, FROM WALL. FIELD TILE TO BE F404. SEE ARCH. DRWG. FOR WALL TILE PATTERN.

AREA: MEN D110

BASE	FLOOR	A WALL	B WALL	C WALL	D WALL	CEILING
B303	F404	W305	W305	W305	W305	C201
	F405	W306	W306	W306	W306	

NOTE: PORCELAIN TILE TO HAVE A BORDER TILE, F405. PATTERN SHALL BE TWO TILES OF BEIGE, F405, FROM WALL. FIELD TILE TO BE F404. SEE ARCH. DRWG. FOR WALL TILE PATTERN.

AREA: F.F.S. iFIELD FEEDING STORAGE D111

BASE	FLOOR	A WALL	B WALL	C WALL	D WALL	CEILING
B401	F501	W701	W701	W701	W701	C201

AREA: STORAGE D112

BASE	FLOOR	A WALL	B WALL	C WALL	D WALL	CEILING
B401	F501	W701	-	W701	W701	C201

AREA: VESTIBULE D113

BASE	FLOOR	A WALL	B WALL	C WALL	D WALL	CEILING
B401	F501	W701	-	W701	W701	C201

AREA: REF. (REFRIGERATOR) D114

BASE	FLOOR	A WALL	B WALL	C WALL	D WALL	CEILING
B401	F501	W701	-	-	W701	C201

AREA: REF. (REFRIGERATOR) D115

BASE	FLOOR	A WALL	B WALL	C WALL	D WALL	CEILING
B401	F501	W701	W701	-	-	C201

AREA: FREEZER D116

BASE	FLOOR	A WALL	B WALL	C WALL	D WALL	CEILING
B401	F501	W701	W701	-	-	C201

AREA: REF. (REFRIGERATOR) D117

BASE	FLOOR	A WALL	B WALL	C WALL	D WALL	CEILING
B401	F501	W701	W701	- 1	- 1	C201

AREA: DRY STORAGE D118

BASE	FLOOR	A WALL	B WALL	C WALL	D WALL	CEILING
B401	F501	W701	W701	W701	W701	C201

AREA: WASTE PULPING SYSTEM D119

BASE	FLOOR	A WALL	B WALL	C WALL	D WALL	CEILING
NONE	CONC	W701	W701	W701	W701	C201

AREA: ELEC D120

BASE	FLOOR	A WALL	B WALL	C WALL	D WALL	CEILING
NONE	CONC	W701	W701	W701	W701	C201

AREA: MECHANICAL D121

BASE	FLOOR	A WALL	B WALL	C WALL	D WALL	CEILING
NONE	CONC	W701	W701	W701	W701	C201

AREA: KITCHEN D122

BASE	FLOOR	A WALL	B WALL	C WALL	D WALL	CEILING
B401	F501	W701	W701	W701	W701	C401

AREA: OFFICE D123

BASE	FLOOR	A WALL	B WALL	C WALL	D WALL	CEILING
B401	F501	W701	W701	W701	W701	C301

AREA: OFFICE D124

BASE	FLOOR	A WALL	B WALL	C WALL	D WALL	CEILING
B401	F501	W701	W701	W701	W701	C301

AREA: CORRIDOR D125

BASE	FLOOR	A WALL	B WALL	C WALL	D WALL	CEILING
B303	F404	W305	W305	W305	W305	C301
	F405	W306	W306	W306	W306	
		W501	W501	W501	W501	

NOTE: PORCELAIN TILE TO HAVE A BORDER TILE, F405. PATTERN SHALL BE TWO TILES OF BEIGE, F405, FROM WALL. FIELD TILE TO BE F404. SEE ARCH. DRWG. FOR WALL TILE PATTERN.

AREA: SERVING LINE 1 D126

BASE	FLOOR	A WALL	B WALL	C WALL	D WALL	CEILING
B303	F404	W305	W305	W305	W305	C301
	F405	W306	W306	W306	W306	
				W501	W501	

NOTE: PORCELAIN TILE TO HAVE A BORDER TILE, F405. PATTERN SHALL BE TWO TILES OF BEIGE, F405, FROM WALL. FIELD TILE TO BE F404. SEE ARCH. DRWG. FOR WALL TILE PATTERN.

AREA: SERVING LINE 2 D127

BASE	FLOOR	A WALL	B WALL	C WALL	D WALL	CEILING
B303	F404	W305	W305	W305	W305	C301
	F405	W306	W306	W306	W306	
			W501	W501	W501	

NOTE: PORCELAIN TILE TO HAVE A BORDER TILE, F405. PATTERN SHALL BE TWO TILES OF BEIGE, F405, FROM WALL. FIELD TILE TO BE F404. SEE ARCH. DRWG. FOR WALL TILE PATTERN.

AREA: SERVING AREA 1 D128

BASE	FLOOR	A WALL	B WALL	C WALL	D WALL	CEILING
B401	F501	W701	W701	W701	W701	C401

AREA: SERVING AREA 2 D129

BASE	FLOOR	A WALL	B WALL	C WALL	D WALL	CEILING
B401	F501	W701	W701	W701	W701	C401

AREA:SERVING AREA 3 D130

BASE	FLOOR	A WALL	B WALL	C WALL	D WALL	CEILING
B401	F501	W701	W701	W701	W701	C401

AREA:BEVERAGE D131

BASE	FLOOR	A WALL	B WALL	C WALL	D WALL	CEILING
B401	F501	W701	W701	W701	W701	C301

AREA:COMM D132

BASE	FLOOR	A WALL	B WALL	C WALL	D WALL	CEILING
NONE	CONC	W701	W701	W701	W701	C201

AREA: VESTIBULE D133

BASE	FLOOR	A WALL	B WALL	C WALL	D WALL	CEILING
B303	F404	W305	-	W305	-	C201
	F405	W306				

NOTE: PORCELAIN TILE TO HAVE A BORDER TILE, F405. PATTERN SHALL BE TWO TILES OF BEIGE, F405, FROM WALL. FIELD TILE TO BE F404. SEE ARCH. DRWG. FOR WALL TILE PATTERN.

AREA: WOMEN D134

BASE	FLOOR	A WALL	B WALL	C WALL	D WALL	CEILING
B303	F404	W305	W305	W305	W305	C201
	F405	W306	W306	W306	W306	

NOTE: PORCELAIN TILE TO HAVE A BORDER TILE, F405. PATTERN SHALL BE TWO TILES OF BEIGE, F405, FROM WALL. FIELD TILE TO BE F404. SEE ARCH. DRWG. FOR WALL TILE PATTERN.

AREA: MEN D135

BASE	FLOOR	A WALL	B WALL	C WALL	D WALL	CEILING
B303	F404	W305	W305	W305	W305	C201
	F405	W306	W306	W306	W306	

NOTE: PORCELAIN TILE TO HAVE A BORDER TILE, F405. PATTERN SHALL BE TWO TILES OF BEIGE, F405, FROM WALL. FIELD TILE TO BE F404. SEE ARCH. DRWG. FOR WALL TILE PATTERN.

AREA: DINING AREA "A" D136

BASE	FLOOR	A WALL	B WALL	C WALL	D WALL	CEILING
B303	F404	W305	W305	-	W305	C301
	F405	W306	W306		W306	
		W501	W502		W501	

AREA: DINING AREA "B" D137

BASE	FLOOR	A WALL	B WALL	C WALL	D WALL	CEILING
B303	F404	-	W305	W305	W305	C301
	F405		W306	W306	W306	
			W502	W501	W501	

AREA: DINING AREA "C" D138

BASE	FLOOR	A WALL	B WALL	C WALL	D WALL	CEILING
B303	F404	W305	W305	-	W305	C301
	F405	W306	W306		W306	
		W501	W502		W501	

AREA: DINING AREA "D" D139

BASE	FLOOR	A WALL	B WALL	C WALL	D WALL	CEILING
B303	F404	W305	W305	W305	W305	C301
	F405	W306	W306	W306	W306	
		W501	W502	W501	W501	

AREA: DISHWASHING D140

BASE	FLOOR	A WALL	B WALL	C WALL	D WALL	CEILING
B401	F501	W701	W702	W701	W701	C401

AREA: WOMEN D141

BASE	FLOOR	A WALL	B WALL	C WALL	D WALL	CEILING
B303	F404	W305	W305	W305	W305	C201
	F405	W306	W306	W306	W306	

NOTE: PORCELAIN TILE TO HAVE A BORDER TILE, F405. PATTERN SHALL BE TWO TILES OF BEIGE, F405, FROM WALL. FIELD TILE TO BE F404. SEE ARCH. DRWG. FOR WALL TILE PATTERN.

AREA: MEN D142

BASE	FLOOR	A WALL	B WALL	C WALL	D WALL	CEILING
B303	F404	W305	W305	W305	W305	C201
	F405	W306	W306	W306	W306	

NOTE: PORCELAIN TILE TO HAVE A BORDER TILE, F405. PATTERN SHALL BE TWO TILES OF BEIGE, F405, FROM WALL. FIELD TILE TO BE F404. SEE ARCH. DRWG. FOR WALL TILE PATTERN.

AREA: JANITOR D143

BASE	FLOOR	A WALL	B WALL	C WALL	D WALL	CEILING
B201	F301	W401	W401	W401	W401	C201
		W402	W402	W402	W402	

NOTE: PORCELAIN TILE TO HAVE A BORDER TILE, F405. PATTERN SHALL BE TWO TILES OF BEIGE, F405, FROM WALL. FIELD TILE TO BE F404. SEE ARCH. DRWG. FOR WALL TILE PATTERN.

AREA: MECHANICAL D144

BASE	FLOOR	A WALL	B WALL	C WALL	D WALL	CEILING
-	-	W701	W701	W701	W701	C201

AREA: VESTIBULE D145

BASE	FLOOR	A WALL	B WALL	C WALL	D WALL	CEILING
B303	F404	-	W305	W305	W305	C201
	F405	-	W306	W306	W306	
			W502	W501	W501	

NOTE: PORCELAIN TILE TO HAVE A BORDER TILE, F405. PATTERN SHALL BE TWO TILES OF BEIGE, F405, FROM WALL. FIELD TILE TO BE F404. SEE ARCH. DRWG. FOR WALL TILE PATTERN.

AREA: VESTIBULE D146

BASE	FLOOR	A WALL	B WALL	C WALL	D WALL	CEILING
B303	F404	-	W305	W701	W305	C201
	F405	-	W306		W306	
			W502		W501	

NOTE: PORCELAIN TILE TO HAVE A BORDER TILE, F405. PATTERN

SHALL BE TWO TILES OF BEIGE, F405, FROM WALL. FIELD TILE TO BE F404. SEE ARCH. DRWG. FOR WALL TILE PATTERN.

AREA: BOILER ROOM D147

BASE	FLOOR	A WALL	B WALL	C WALL	D WALL	CEILING
-	-	W701	W701	W701	W701	C201

AREA: POTS & PANS D148

BASE	FLOOR	A WALL	B WALL	C WALL	D WALL	CEILING
B401	F501	W701	W701	W701	W701	C401

AREA: BREAD STORAGE D149

BASE	FLOOR	A WALL	B WALL	C WALL	D WALL	CEILING
B401	F501	W701	W701	-	W701	C401

AREA: ICE D150

BASE	FLOOR	A WALL	B WALL	C WALL	D WALL	CEILING
B401	F501	W701	W701	W701	W701	C401

AREA: DISHWASHING SUPPLIES D151

BASE	FLOOR	A WALL	B WALL	C WALL	D WALL	CEILING
B401	F501	W701	W701	W701	W701	C401

PART 3 EXECUTION (Not Applicable)

-- End of Section --

SECTION 10101

MISCELLANEOUS ITEMS
09/2000
Amendment 0004

PART 1 GENERAL

1.1 REFERENCES

The publications listed below form a part of this specification to the extent referenced. The publications are referred to in the text by basic designation only.

THE ALUMINUM ASSOCIATION (AA)

AA-03	(Sep. 1980, 7th Ed.) Designation System for Aluminum Finishes

AMERICAN SOCIETY FOR TESTING AND MATERIALS (ASTM)

ASTM C 543	(1981) Slate Blackboards
ASTM E 814	(1983) Fire Tests of Through-Penetration Fire Stops

PORCELAIN ENAMEL INSTITUTE (PEI)

PEI S 100	(1965) Architectural Porcelain Enamel on Steel for Exterior Use.

1.2 SUBMITTALS

Government approval is required for submittals with a "G" designation; submittals not having a "G" designation are for information only. When used, a designation following the "G" designation identifies the office that will review the submittal for the Government. The following shall be submitted in accordance with Section 01330 SUBMITTAL PROCEDURES:

SD-02 Shop Drawings

Fabrication/Erection/Installation Drawings

Drawings shall be submitted for each product listed in PART 2 PRODUCTS. Drawings shall show sizes, details of construction, method of construction, method of assembling, hardware materials, colors, method of mounting, location of each item, specifications for surface preparation and installation of items, and all other details pertinent to installation. For each product, drawings shall identify all parts by name and material. Materials fabricated or delivered to the job site before approval of the drawings shall be subject to rejection.

SD-03 Product Data

Manufacturer's Catalog Data

SD-04 Samples

Chalkboards and bulletin boards

Unless otherwise indicated, samples shall be full size, taken from manufacturer's stock, and be complete as required for installation. After approval, samples may be installed in the work provided each sample is clearly identified and its location recorded. Provide one sample(s) of each product listed in PART 2 PRODUCTS unless otherwise indicated below:

Each type writing and tack board surface, 150 mm square.

Full-size wall clips or anchoring devices.

Each type of frame, 200 mm long.

Each type of trim and chalk trough, 200 mm long.

Each accessory, full size.

1.3 DELIVERY AND STORAGE

Materials and products shall be delivered to the site in the manufacturer's original unopened containers with brand name and type clearly marked. Materials and products shall be carefully handled and stored in dry, watertight enclosures.

1.4 FIELD MEASUREMENTS

Field measurements shall be taken prior to the preparation of drawings and fabrication to ensure proper fits.

PART 2 PRODUCTS

2.1 GENERAL

Supplementary parts necessary to complete each product item shall be included even though such work is not definitely shown or specified. The Contractor shall furnish to the proper trades all anchors, sockets, or fastenings required for securing items to other construction. Details and specifications of items for which standard products are available are representative guides of requirements for such items. Standard products, generally meeting such requirements, will be accepted, if details of construction and installation are approved by the Contracting Officer.

2.1.1 Metal Thickness

Gages of sheet iron and steel specified are U. S. Standard for sheet and plate. Extruded sections shall be at least 3.125 mm thick, unless otherwise specified or shown on the drawings.

2.1.2 Aluminum Frames

Aluminum frames, trim, and accessories shall be fabricated of 6063-T5 or T6 extruded aluminum alloy. Corners and connections shall be hairline miter or butt joints. Exposed aluminum surfaces shall have a medium bronze satin

finish. Satin finish shall be chemically etched medium matte anodic coating, Class II Architectural, 0.4 mil thick, in accordance with AA-03.

2.2 BULLETIN BOARDS

Bulletin board shall consist of a vinyl covered tack boards and a snap-on aluminum frame. Frame shall be secured to the wall be means of concealed screws or bolt hangers. Bulletin board shall consist of a permanent header panel with a general title, such as "Notices" or "Information", and a 1.6 mm cork pinning surface glued to 9.5 mm thick plywood or hardboard backing. Cork shall have a plastic impregnated surface and burlap backing. The vinyl covered cork's surface finish shall be smooth and be free from air pockets, raised cork blemishes, and joint imperfections. Bulletin board design shall be as follows:

a. Colors: Header panel - white letters on standard brown background; vinyl cork panel - medium gray.

b. Dimensions: 900 mm by 1800 mm .

c. Message: Heading - upper and lower case helvetica medium, 50 mm capital letter height, flush left.

d. Sign grid - see attached drawing.

2.3 FIRE EXTINGUISHER CABINETS

Metal fire extinguisher cabinets shall be furnished and installed where shown on the drawings or specified. Cabinets to be located in fire-rated walls shall be fire-rated type, fabricated in accordance with ASTM E 814, and shall be listed by an approved testing agency for 1- and 2-hour combustible and non-combustible wall systems. The testing agency's seal shall be affixed to each fire-rated cabinet. Cabinets shall be of the recessed type suitable for 10 kg extinguishers. Box and trim shall be of heavy gage rolled steel. Door shall be a rigid frame with full length piano type hinge and double strength (DSA) glass panel. Door and box shall be prime-coated inside and out to receive field finish as specified in Section 09915 - COLOR SCHEDULE.

2.4 DOCK BUMPERS

Bumpers shall be resilient rubber material of rubberized fabric truck tires cut to uniform size pads and punched to receive 19 mm supporting rods. Resilient portion of the bumpers shall be 250 mm high, 525 mm wide, and 150 mm deep, minimum sized as indicated on the drawings. Bumpers shall be 150 mm thick, minimum stand out from dock, and closed with two 75 mm by 62.5 mm by 6.25 mm structural steel angles under approximately 680 kg pressure. Angles shall be welded to 19 mm rods at one end and closed with threaded rod and nut at the other end. Anchor leg of angle shall extend 62 mm beyond the rubber surface at each end and contain two or three 20 mm anchor bolt holes. Anchor the legs to the dock wall with preset 19 mm by 200mm cadmium plated J bolts or hex head bolts, nuts, and washers.

2.5 PUBLIC TELEPHONE ENCLOSURES

Public Telephone Enclosures shall be . The unit shall be equal to Model GO6015/Trim-Line, Phillips & Brooks/Gladwin. Finish shall be brushed stainless steel exterior with a black molded interior. Interior shall be

lighted. The cabinet shall have a narrow depth; 600mm (wide) x 250mm (deep) x 1050mm (in height). The unit shall be wall mounted at a 1350 mm coin slot height. (ADA) See Architectural drawings for placement locations. **A contact for these units is Myrmidon Corp. 800-880-0771 (am#4)**.

2.6 BENCHES

Benches (movable), consist of maple bench tops mounted to free-standing trapezoidal-shaped pedestals as manufactured by "Republic Storage Systems" or approved equal. Pedestals shall be made from 6mm (1/4") x 76mm (3") aluminum bar stock, with black anodized finish. Benches and pedestals shall have an overall height of 445mm (17 1/2"), 242mm (9 1/2") width full finished thickness laminated maple. Lengths shall be 914mm (3'-0").

2.7 TELEVISION MOUNTS

Television mounts shall be standard ceiling mounts equal to **(___ am#4) Bretford Model TYCC3027-BK (am#4)** Ceiling Yoke 25-27" TV Mount" or approved equal. Mount to accomodate 25-27" diagonal monitor and is width-adjustable from ***(am#4) 619 - 800mm (24 3/8 - 27 7/8") (am#4)***. Arms of yoke are also height adjustable from **(am#4) 606 - 708mm (23 7/8 - 27 7/8") (am#4)** in 1 1/2" increments to surround the TV cabinet. Complete with perforated **(____ am#4)** forward tilt capability and full 360 degree swivel capability. Provide threaded pipe from top of mount to underside of structural frame and necessary structural bracing. **Television Mounts shall also meet the bracing requirements per Specifications Section 11026 - ANTI-TERRORISM/FORCE PROTECTION MEASURES as noted therein. (am#4)**

2.8 BOOTHS (Dining Seating)

Booths as shown in Drawings shall be "Cambridge" Model CA 2012-36" Doubles and Singles as manufactured by Falcon or approved equal by C.O.E. District Interior Designer. Booths shall be upholstered with cloth horizontal channel inside backs, and with vinyl on seats, sides, and tops. Base of booths shall be vinyl rubber. Eight single booths shall be provided and shall measure 1140mm (45") length x 610mm (24") deep x 914mm (36") high. Thirtytwo double booths shall be provided and shall measure 1140mm (45") length x 1195mm (47") deep x 914 (36") high. Manufacturer's standard finishes shall be submitted to C.O.E. Interior Designer for approval before manufacture.

PART 3 EXECUTION

3.1 PREPARATION AND INSTALLATION

Mounting surface preparation and product installation shall be in accordance with the product manufacturer's written recommendations.

3.2 BULLETIN BOARDS

Bulletin boards shall be mounted with the top edge not higher than 1600 mm above the floor.

3.3 CLEANING

Following installation, dirty or discolored surfaces of the products shall be cleaned, with the products left free of defects. Products that are damaged or improperly installed shall be removed and reinstalled or

replaced with new products as directed.

-- End of Section --

SECTION 10260

WALL AND CORNER PROTECTION
12/95
AMENDMENT 0004

PART 1 GENERAL

1.1 REFERENCES

The publications listed below form a part of this specification to the extent referenced. The publications are referred to in the text by basic designation only.

ALUMINUM ASSOCIATION (AA)

AA DAF-45	(1997) Designation System for Aluminum Finishes

AMERICAN SOCIETY FOR TESTING AND MATERIALS (ASTM)

ASTM A 167	(1996) Stainless and Heat-Resisting Chromium-Nickel Steel Plate, Sheet, and Strip
ASTM B 221	(1996) Aluminum and Aluminum-Alloy Extruded Bars, Rods, Wire, Profiles, and Tubes
ASTM D 256	(1997) Determining the IZOD Pendulum Impact Resistance of Plastics
ASTM D 635	(1998) Rate of Burning and/or Extent and Time of Burning of Self-Supporting Plastics in a Horizontal Position
ASTM E 84	(19998e1) Surface Burning Characteristics of Building Materials

NATIONAL ASSOCIATION OF ARCHITECTURAL METAL MANUFACTURERS (NAAMM)

NAAMM AMP 500 Manual	(1988) Metal Finishes Manual for Architectural and Metal Products

NATIONAL FIRE PROTECTION ASSOCIATION (NFPA)

NFPA 80	(1999) Fire Doors and Fire Windows

SOCIETY OF AMERICAN AUTOMOTIVE ENGINEERS (SAE)

SAE J1545	(1986) Instrumental Color Difference Measurement for Exterior Finishes, Textiles and Color Trim

1.2 SUBMITTALS

Government approval is required for submittals with a "G" designation; submittals not having a "G" designation are for information only. When used, a designation following the "G" designation identifies the office that will review the submittal for the Government. The following shall be submitted in accordance with Section 01330 SUBMITTAL PROCEDURES:

SD-02 Shop Drawings

Corner GuardsG

Drawings indicating locations and typical elevations of each type of item. Drawings shall show vertical and horizontal dimensions, full size sections, thickness of materials, and fastening details.

SD-03 Product Data

Corner Guards;G

Manufacturer's descriptive data, catalog cuts, installation instructions, and recommended cleaning instructions.

SD-04 Samples

Finish; G

Manufacturer's standard samples indicating color and texture of materials requiring color and finish selection.

Samples to be submitted for approval to:
Architectural Section
Design Branch
Fort Worth District

SD-07 Certificates

Corner Guards; G

Statements attesting that the items comply with specified fire and safety code requirements.

1.3 DELIVERY AND STORAGE

Materials shall be delivered to the project site in manufacturer's original unopened containers with seals unbroken and labels and trademarks intact. Materials shall be kept dry, protected from weather and damage, and stored under cover. Materials shall be stored at approximately 21 degrees C for at least 48 hours prior to installation.

1.4 WARRANTY

Manufacturer's standard performance guarantees or warranties that extend beyond a 1 year period shall be provided.

PART 2 PRODUCTS

2.1 GENERAL

To the maximum extent possible, corner guards, door and door frame protectors, wall guards (bumper guards), wall panels and wall covering shall be the standard products of a single manufacturer and shall be furnished as detailed. Drawings show general configuration of products required, and items differing in minor details from those shown will be acceptable.

2.1.1 Resilient Material

Resilient material shall consist of high impact resistant extruded acrylic vinyl, polyvinyl chloride, or injection molded thermal plastic and shall conform to the following:

2.1.1.1 Minimum Impact Resistance

Minimum impact resistance shall be 960.8 N.m/m (18 ft. lb/sq. inch) when tested in accordance with ASTM D 256, (Izod impact, ft. lbs per sq inch notched).

2.1.1.2 Fire Rating

Fire rating shall be Class 1 when tested in accordance with ASTM E 84, having a maximum flame spread of 25 and a smoke developed rating of 450 or less. Material shall be rated self extinguishing when tested in accordance with ASTM D 635. Material shall be labeled and tested by an approved nationally known testing laboratory. Resilient material used for protection on fire rated doors and frames shall be listed by the testing laboratory performing the tests. Resilient material installed on fire rated wood/steel door and frame assemblies shall have been tested on similar type assemblies. Test results of material tested on any other combination of door/frame assembly will not be acceptable.

2.2 CORNER GUARDS

2.2.1 Resilient Corner Guards

Corner guard units shall be surface mounted type, radius formed to profile shown. Corner guards shall be provided where noted as **AM4 C.G. (corner guard)** as shown in drawings. Mounting hardware, cushions, and base plates shall be furnished. Assembly shall consist of a snap-on corner guard formed from high impact resistant resilient material, minimum 1.98 mm thick, mounted on a continuous aluminum retainer. Extruded aluminum retainer shall conform to ASTM B 221, alloy 6063, temper T5 or T6. Flush mounted type guards shall act as a stop for adjacent wall finish material. Factory fabricated end closure caps shall be furnished for top and bottom of surface mounted corner guards. Flush mounted corner guards installed in fire rated wall shall maintain the rating of the wall. Insulating materials that are an integral part of the corner guard system shall be provided by the manufacturer of the corner guard system. Exposed metal portions of fire rated assemblies shall have a paintable surface.

2.3 TRIM, FASTENERS AND ANCHORS

Vinyl trim, fasteners and anchors shall be provided for each specific installation as shown.

2.4 FINISH

2.4.1 Resilient Material Finish

Finish for resilient material shall be clear arylic .

2.5 ADHESIVES

Adhesive for resilient material shall be in accordance with manufacturers recommendations.

2.6 COLOR

Color shall be in accordance with Section 09915 COLOR SCHEDULE .

PART 3 EXECUTION

3.1 INSTALLATION

3.1.1 Corner Guards

Material shall be mounted at location indicated in accordance with manufacturer's recommendations.

SECTION 10550

POSTAL SPECIALTIES
09/2000
Amendment 0004

PART 1 GENERAL

1.1 REFERENCES

The publications listed below forms a part of this specification to the extent referenced. The publication is referred to in the text by the basic designation only.

U.S. POSTAL SERVICE (USPS)

USPS Publication 17	(1982) Apartment House Mail Receptacles
USPS Publication 18	Neighborhood Delivery and Collection Boxes

1.2 SUBMITTALS

Government approval is required for submittals with a "G" designation; submittals not having a "G" designation are for information only. When used, a designation following the "G" designation identifies the office that will review the submittal for the Government. The following shall be submitted in accordance with Section 01330 SUBMITTAL PROCEDURES:

SD-02 Shop Drawings

Postal Specialties

Submit drawings showing plans, elevations, details of construction, gages of metal, fittings, mounting, and anchoring for all postal specialty items required for the project.

SD-03 Product Data

Postal Specialties

Manufacturer's Catalog Data

PART 2 PRODUCTS

2.1 MAILBOXES

USPS Publication 17, Type II (horizontal),rear loading, door sizes (nominal) -

127 mm (5") height by 152 mm (6") width, for boxes as shown on Elevation 3/AA14.
127 mm (5") height by 318 mm (12.5") width, for 3 rows of boxes on 4 & 8/AA14.
265 mm (10.5") height by 318mm (12.5") width, for 2 rows of boxes on 4 & 8/AA14.
(am#4)

compartment depth - 385 mm . Fronts shall be cast or extruded aluminum. Compartments shall be fabricated with sheet aluminum or steel enclosure to match box fronts.

2.1.1 Box Numbers

Box numbers shall be engraved on the front of the compartment doors in accordance with USPS Publication 17 and the Contracting Officer's directions.

2.1.2 Compartment Door Locks

Keys. Key cylinders shall be 5-pin tumbler type.

2.1.3 Finish

Fronts of boxes and associated trim shall be color- bronze

2.2 MAIL DROPS

Mail drops shall be fabricated of extruded aluminum, 1.5 mm or thicker; have a satin anodized bronze finish; and have "U.S. MAIL" engraved in 25 mm high letters on the flap door. Door dimensions shall be 275 mm by 90 mm (nominal).

2.3 DIRECTORIES

Directories shall comply with USPS Publication 17 and shall match the mailboxes in material and finish.

PART 3 EXECUTION

3.1 INSTALLATION

Mail boxes, mail drops, and directories shall be as shown and as requried by USPS Publication 17. Postal accessories shall be installed straight and plumb with all horizontal lines level, and rigidly anchored to the supporting construction. Anchors shall be located so as to be concealed in the finished work.

-- End of Section --

SECTION 11020A

ARMS ROOM VAULT DOOR
12/97
Amendment 0004

PART 1 GENERAL

1.1 REFERENCES

The publications listed below form a part of this specification to the extent referenced. The publications are referred to in the text by basic designation only.

U.S. GENERAL SERVICES ADMINISTRATION (GSA)

FS AA-D-00600 (Rev B) Door, Vault, Security

1.2 GENERAL REQUIREMENTS

The arms room vault door unit shall be a steel security-vault type door with frame, day gate, and shall be a standard product of a manufacturer specializing in this type of fabrication.

1.3 SUBMITTALS

Government approval is required for submittals with a "G" designation; submittals not having a "G" designation are for information only. When used, a designation following the "G" designation identifies the office that will review the submittal for the Government. The following shall be submitted in accordance with Section 01330 SUBMITTAL PROCEDURES:

SD-03 Product Data

Arms Room Vault Door and Frame;

Manufacturer's catalog data including catalog cuts and brochures. The data shall show that the proposed vault door unit conforms with the requirements in FS AA-D-00600, and has been tested and approved by the General Services Administration (GSA).

SD-07 Certificates

Arms Room Vault Door and Frame;

Certification shall state that vault-door units that do not bear the GSA label are constructed to Class 5 standards.

1.4 DELIVERY AND STORAGE

Door and frame assemblies shall be delivered to the jobsite in a protective covering with the brand and name clearly marked thereon. Materials delivered to the jobsite shall be inspected for damage, and unloaded with a minimum of handling. Storage shall be in a dry location with adequate ventilation, free from dust, water, and other contaminants, and which permits easy access for inspection and handling. Door assemblies shall be

stored off the floor on nonabsorptive strips or wood platforms. Damage to doors and frames shall be prevented during handling. Damaged items that cannot be restored to like-new condition shall be replaced.

PART 2 PRODUCTS

2.1 VAULT DOOR AND FRAME

Design and construction of the door and frame assembly shall conform to FS AA-D-00600. The door shall be Class 5, Type IIR - right opening swing without optical device or IIL - left opening swing without optical device, Style K - key change combination lock.

2.2 DAY GATE

The day gate shall be the manufacturer's standard product designed for use with the vault door furnished, and shall provide access control . The gate shall be hinged on the same side as the vault door, and shall have a locking device operable from outside by key.

PART 3 EXECUTION

3.1 INSTALLATION

The vault door assembly shall be installed in strict compliance with the printed instructions and drawings provided by the manufacturer. The day gate shall be installed in a manner that will not interfere with operation of the release handle on the inside of the vault door. After installation, the door, the locking mechanism, and the inner escape device shall be adjusted for proper operation.

-- End of Section --

SECTION 11026

ANTI-TERRORISM/FORCE PROTECTION MEASURES
04/99
Amendment 0004

PART 1 GENERAL

1.1 REFERENCES

The publications listed below form a part of this specification to the extent referenced. The publications are referred to in the text by basic designation only.

AMERICAN SOCIETY FOR TESTING AND MATERIALS (ASTM)

ASTM A 36/A 36M	(1997a) Carbon Structural Steel
ASTM A 53	(1999) Pipe, Steel, Black and Hot-Dipped, Zinc-Coated, Welded and Seamless
ASTM A 153/A 153M	(1998) Zinc Coating (Hot-Dip) on Iron and Steel Hardware
ASTM A 307	(1997) Carbon Steel Bolts and Studs, 60,000 PSI Tensile Strength
ASTM A 325	(1997) Structural Bolts, Steel, Heat Treated, 120/105 ksi Minimum Tensile Strength
ASTM A 325M	(1997) High-Strength Bolts for Structural Steel Joints (Metric)
ASTM A 500	(1999) Cold-Formed Welded and Seamless Carbon Steel Structural Tubing in Rounds and Shapes
ASTM A 563	(1997) Carbon and Alloy Steel Nuts
ASTM A 572/A 572M	(1999) High-Strength Low-Alloy Columbium-Vanadium Structural Steel
ASTM A 603	(1998) Zinc-Coated Steel Structural Wire Rope
ASTM A 653/A 653M	(1999) Steel Sheet, Zinc-Coated (Galvanized) or Zinc-Iron Alloy-Coated (Galvannealed) by the Hot-Dip Process
ASTM E 488	(1996) Strength of Anchors in Concrete and Masonry Elements

ASME INTERNATIONAL (ASME)

ASME B18.2.1	(1996) Square and Hex Bolts and Screws

(Inch Series)

ASME B18.2.2 (1987; R 1999) Square and Hex Nuts (Inch Series)

1.2 SYSTEM DESCRIPTION

1.2.1 General Requirements

The requirements for anti-terrorism/force protection measures described in this section shall be applied to the equipment, components, and systems indicated or specified. Resistance to lateral forces induced by blasts shall be accomplished without consideration of friction resulting from gravity loads. The basic force formula for lateral restraint shall be 0.5 times the weight of the supported equipment, component, or system (including the weight of fluid or material within) applied in any horizontal direction at the center of gravity of the equipment, component, or system. The basic force formula for vertical restraint shall be 1.5 times the weight of the supported equipment, component, or system (including the weight of fluid or material within) in the downward direction. The design of steel members for bracing and anchorage systems shall be in accordance with the AISC Manual of Steel Construction, Load and Resistance Factor Design.

1.2.2 Equipment, Components, and Systems

The bracing for the following equipment, components, and systems shall be designed by the Contractor in accordance with the requirements of this specification:

Suspended Acoustical and Gypsum Board Ceilings
Overhead Piping Systems and Components
Overhead Duct Systems
Overhead Mechanical Equipment
Overhead Electrical Conduit, Cable Trays, and Equipment
Ceiling Mounted Televisions (design for 45 kg television)

1.3 SUBMITTALS

Government approval is required for submittals with a "G" designation; submittals not having a "G" designation are for information only. When used, a designation following the "G" designation identifies the office that will review the submittal for the Government. The following shall be submitted in accordance with Section 01330 SUBMITTAL PROCEDURES:

SD-02 Shop Drawings

Bracing; G, ED

Detail drawings along with catalog cuts, templates, and erection and installation details, as appropriate, for the items listed. Submittals shall be complete in detail; shall indicate thickness, type, grade, class of metal, and dimensions; and shall show construction details, reinforcement, anchorage, and installation with relation to the building construction. For equipment and systems in buildings that have a performance objective higher than life-safety, the drawings shall be stamped by the registered engineer who stamps the calculations required above.

SD-03 Product Data

Bracing; G, ED

Copies of the design calculations with the detail drawings. Calculations shall be stamped by a registered engineer and shall verify the capability of structural members to which bracing is attached for carrying the load from the brace.

1.4 EQUIPMENT REQUIREMENTS

1.4.1 Rigidly Mounted Equipment

The following specific items of equipment: Wall mounted emergency lights to be furnished under this contract shall be supported in a manner to resist the lateral and vertical forces specified in paragraph 1.2.1 General Requirements. Do not rigidly mount equipment on both sides of a building expansion joint.

1.4.2 Nonrigid or Flexibly-Mounted Equipment

The following specific items of equipment to be furnished: Television mounting brackets, fan coil units, unit heaters, and in-line exhaust fans shall be supported in a manner to resist the lateral and vertical forces specified in paragraph 1.2.1 General Requirements applied to the center of gravity of the equipment.

1.5 PIPING, DUCT, AND CONDUIT REQUIREMENTS

1.5.1 Fire Protection Piping

All fire protection piping systems shall be sway braced in accordance with NFPA 13 as for piping subject to earthquakes. No additional provisions are required

1.5.2 All Other Piping, Conduit, Cable Trays, and Ducts

Transverse and longitudinal sway bracing shall be provided for all other piping, conduit, cable trays, and ducts except for the following:

Gas piping of less than 25 mm nominal diameter.
Piping, equipments, conduit, cable trays, and ducts in boiler, mechanical, electrical rooms and Central Chiller Plant.
All other piping and conduit of less than 65 mm nominal diameter.
All cable trays of less than 76 mm width.
All rectangular air-handling ducts of less than 0.6 square meters in cross-sectional area.
All round air-handling ducts less than 710 mm in diameter.
All piping and conduits suspended by individual hangers 0.3 m or less in length from the top of pipe to the bottom of the support structure.
All ducts and cable trays suspended by hangers 0.3 m or less in length from the top of the duct or cable tray to the bottom of the support structure.

1.6 SUSPENDED ACOUSTICAL AND SUSPENDED GYPSUM CEILINGS

Suspended ceiling systems shall be restrained in a manner indicated and as

specified in Section 09510 ACOUSTIC CEILINGS and Section 09250 GYPSUM WALLBOARD

1.7 LIGHTING FIXTURES IN BUILDINGS

Lighting fixtures and supports will conform to the following:

Fixture supports will employ materials that are suitable for the purpose of restrained support. Cast metal parts, other than those of malleable iron, and cast iron or rolled threads, will be subject to special investigation to ensure structural adequacy.

Loop and hook or swivel hanger assemblies for pendant fixtures will be fitted with a restraining device to hold the stem in the support position during lateral motions. Pendant supported fluorescent fixtures will also be provided with a flexible hanger device at the attachment to the fixture channel to preclude breaking of the support. The motion of swivels or hinged joints will not cause sharp binds in conductors or damage to insulation.

Each recessed individual or continuous row of fluorescent fixtures will be supported by a restrained suspended ceiling support system, and will be fastened thereto at each corner of the fixture; or will be provided with fixture support wires attached to the building structural members using two wires for individual fixtures, and one wire per unit of continuous row fixtures. These support wires (minimum 12-gauge wire) will be capable of supporting four times the supported load.

A supporting assembly that is intended to be mounted on an outlet box will be designed to accomodate mounting features on 102 mm boxes, 76 mm plaster rings, and fixture studs.

Each surface-mounted individual or continuous row of fluorescent fixtures will be attached to a restrained ceiling support system. Support devices for attaching fixtures to suspended ceilings will be a locking-type scissor clamp or a full loop band that will securely attach to the ceiling support. Fixtures attached to the underside of a structural slab will be properly anchored to the slab at each corner of the fixture.

Each wall-mounted emergency light unit will be secured in a manner that will hold the unit in place in the event of a lateral force of 0.5 times the weight of the unit applied to the center of gravity of the unit.

PART 2 PRODUCTS

2.1 BOLTS AND NUTS

Squarehead and hexhead bolts, and heavy hexagon nuts, ASME B18.2.1, ASME B18.2.2, or ASTM A 307 for bolts and ASTM A 563 for nuts . Bolts and nuts used underground and/or exposed to weather shall be galvanized in accordance with ASTM A 153/A 153M.

2.2 SWAY BRACING

Material used for members listed in this section and on the drawings, shall be structural steel conforming with the following:

a. Plates, rods, and rolled shapes, both ASTM A 36/A 36M and ASTM A 572/A 572M, grade 503 will be allowed.

b. Wire rope, ASTM A 603.

c. Tubes, ASTM A 500, Grade B.

d. Pipes, ASTM A 53, Type E or S, Grade B.

e. Light gauge angles, less than 6 mm thickness, ASTM A 653/A 653M.

PART 3 EXECUTION

3.1 BRACING

Bracing shall conform to the arrangements shown. Trapeze-type hanger shall be secured with not less than two 13 mm bolts.

3.2 BUILDING DRIFT

Sway braces for a piping run shall not be attached to two dissimilar structural elements of a building that may respond differentially during an blast event unless a flexible joint is provided.

3.3 ANCHOR BOLTS

3.3.1 Expansion or Chemically Bonded Anchors

Expansion or chemically bonded anchors shall not be used unless test data in accordance with ASTM E 488 has been provided to verify the adequacy of the specific anchor and application. Expansion or chemically bonded anchors shall not be used to resist pull-out in overhead and wall installations if the adhesive is manufactured with temperature sensitive epoxies and the location is accessible to a building fire. Expansion and chemically bonded anchors shall be installed in accordance with the manufacturer's recommendations. The allowable forces shall be adjusted for the spacing between anchor bolts and the distance between the anchor bolt and the nearest edge, as specified by the manufacturer.

3.3.1.1 General Testing

Expansion and chemically bonded anchors shall be tested in place after installation. The tests shall occur not more than 24 hours after installation of the anchor and shall be conducted by an independent testing agency; testing shall be performed on random anchor bolts as described below.

3.3.1.2 Torque Wrench Testing

Torque wrench testing shall be done on not less than 50 percent of the total installed expansion anchors and at least one anchor for every piece of equipment containing more than two anchors. The test torque shall equal the minimum required installation torque as required by the bolt manufacturer. Torque wrenches shall be calibrated at the beginning of each day the torque tests are performed. Torque wrenches shall be recalibrated for each bolt diameter whenever tests are run on bolts of various diameters. The applied torque shall be between 20 and 100 percent of

wrench capacity. The test torque shall be reached within one half turn of the nut, except for 9 mm sleeve anchors which shall reach their torque by one quarter turn of the nut. If any anchor fails the test, similar anchors not previously tested shall be tested until 20 consecutive anchors pass. Failed anchors shall be retightened and retested to the specified torque; if the anchor still fails the test it shall be replaced.

3.3.1.3 Pullout Testing

Expansion and chemically bonded anchors shall be tested by applying a pullout load using a hydraulic ram attached to the anchor bolt. At least 5 percent of the anchors, but not less than 3 per day shall be tested. The load shall be applied to the anchor without removing the nut; when that is not possible, the nut shall be removed and a threaded coupler shall be installed of the same tightness as the original nut. The test setup shall be checked to verify that the anchor is not restrained from withdrawing by the baseplate, the test fixture, or any other fixtures. The support for the testing apparatus shall be at least 1.5 times the embedment length away from the bolt being tested. Each tested anchor shall be loaded to 1 times the design tension value for the anchor. The anchor shall have no observable movement at the test load. If any anchor fails the test, similar anchors not previously tested shall be tested until 20 consecutive anchors pass. Failed anchors shall be retightened and retested to the specified load; if the anchor still fails the test it shall be replaced.

3.4 SWAY BRACES FOR PIPING, CONDUIT, CABLE TRAYS, AND DUCT

Transverse sway bracing for steel and copper pipe, conduit, cable trays, and duct shall be provided at intervals not to exceed 6 meters. Bracing shall consist of at least one vertical angle 50 mm x 50 mm x 16 gauge and one diagonal angle of the same size.

Longitudinal sway bracing shall be provided at intervals not to exceed 12 meters.

3.4.1 Anchor Rods, Angles, and Bars

Anchor rods, angles, and bars shall be bolted to either pipe clamps or pipe flanges at one end and cast-in-place concrete or masonry insert or clip angles bolted to the steel structure on the other end. Rods shall be solid metal or pipe as specified below. Anchor rods, angles, and bars shall not exceed lengths given in the tabulation below.

3.4.2 Maximum Length for Anchor Braces

Anchor brace members that are designed for compression or both tension and compression shall not exceed a slenderness ration (L/r) of 200 where L is the length of the brace member and r is the radius of gyration in the least dimension.

3.4.3 Bolts

Bolts used for attachment of anchors to pipe and structure shall be not less than 13 mm diameter.

3.5 EQUIPMENT SWAY BRACING

3.5.1 Suspended Equipment and Light Fixtures

Equipment sway bracing shall be provided for items supported from overhead floor or roof structural systems, including light fixtures. Braces shall consist of angles, rods, wire rope, bars, or pipes arranged as shown and secured at both ends with not less than 13 mm bolts. Sufficient braces shall be provided for equipment to resist a horizontal force equal to 0.5 times the weight of equipment without exceeding safe working stress of bracing components. Details of equipment bracing shall be submitted for acceptance. In lieu of bracing with vertical supports, these items may be supported with hangers inclined at 45 degrees directed up and radially away from equipment and oriented symmetrically in 90-degree intervals on the horizontal plane, bisecting the angles of each corner of the equipment, provided that supporting members are properly sized to support 1.5 times the operating weight of equipment when hangers are inclined at a 45-degree angle.

-- End of Section --

SECTION 11400

FOOD SERVICE EQUIPMENT
02/97
Amentment 0004

PART 1 GENERAL

1.1 REFERENCES

The publications listed below form a part of this specification to the extent referenced. The publications are referred to in the text by basic designation only.

AMERICAN CONFERENCE OF GOVERNMENTAL INDUSTRIAL HYGIENISTS (ACGIH)

ACGIH-01	(1995) Industrial Ventilation: A Manual of Recommended Practice

AMERICAN GAS ASSOCIATION LABORATORIES (AGAL)

AGAL-01	(1996) Directory of AGA & CGA Certified Appliances and Accessories

AMERICAN SOCIETY FOR TESTING AND MATERIALS (ASTM)

ASTM A 36	(1996) Carbon Structural Steel
ASTM A 123	(1989a) Zinc (Hot-Dip Galvanized) Coatings on Iron and Steel Products
ASTM A 167	(1996) Stainless and Heat-Resisting Chromium-Nickel Steel Plate, Sheet, and Strip
ASTM A 240	(1996) Heat-Resisting Chromium and Chromium-Nickel Stainless Steel Plate, Sheet, and Strip for Pressure Vessels
ASTM A 269	(1994a) Seamless and Welded Austenitic Stainless Steel Tubing for General Service
ASTM B 32	(1995b) Solder Metal
ASTM D 520	(1984; R 1989) Zinc Dust Pigment
ASTM E 84	(1996a) Surface Burning Characteristics of Building Materials

AMERICAN WELDING SOCIETY (AWS)

AWS A5.8	(1992) Filler Metals for Brazing and Braze Welding

MANUFACTURER'S STANDARDIZATION SOCIETY OF THE VALVE AND FITTINGS INDUSTRY (MSS)

MSS SP-72	(1992) Ball Valves with Flanged or Butt-Welding Ends for General Service
MSS SP-110	(1996) Ball Valves Threaded, Socket-Welding, Solder Joint, Grooved and Flared Ends

NATIONAL ELECTRICAL MANUFACTURERS ASSOCIATION (NEMA)

NEMA 250	(1991) Enclosures for Electrical Equipment (1000 Volts Maximum)
NEMA ICS 6	(1993) Industrial Control and Systems, Enclosures
NEMA LD3	(1991) High-Pressure Decorative Laminates

NATIONAL FIRE PROTECTION ASSOCIATION (NFPA)

NFPA 54	(1992) National Fuel Gas Code
NFPA 70	(1996) National Electrical Code
NFPA 96	(1994) Ventilation Control and Fire Protection of Commercial Cooking Equipment

NATIONAL SANITATION FOUNDATION (NSF)

NSF-01	(1994) Listings of Food Equipment and Related Products, Components, and Materials
NSF-02	(1968; Rev Feb 1989) Manual on Sanitation Aspects of Installation of Food Service Equipment
NSF Std 2	(1952; Rev May 1992) Food Equipment
NSF Std 7	(1990) Food Service Refrigerators and Storage Freezers
NSF Std 35	(1991) Laminated Plastics for Surfacing Food Service Equipment

SHEET METAL & AIR CONDITIONING CONTRACTORS' NATIONAL ASSOCIATION (SMACNA)

SMACNA-06	(1995) HVAC Duct Construction Standards - Metal and Flexible

UNDERWRITERS LABORATORIES (UL)

UL-02	(1996; Supple) Electrical Appliance and Utilization Equipment Directory
UL 197	(1993; Rev thru Aug 1996) Commercial Electric Cooking Appliances
UL 207	(1993; Rev thru Mar 1995)

	Refrigerant-Containing Components and Accessories, Nonelectrical
UL 471	(1995; Rev Aug 96) Commercial Refrigerators and Freezers
UL 489	(1996) Molded-Case Circuit Breakers, Molded-Case Switches and Circuit-Breaker Enclosures
UL 710	(1995) Exhaust Hoods for Commercial Cooking Equipment
UL 1046	(1979) Grease Filters for Exhaust Ducts

1.2 GENERAL REQUIREMENTS

Food service equipment shall be of the sizes and types shown. Equipment, materials, and fixtures required for use in conjunction with the items to be furnished by the Government shall be furnished and installed by the Contractor. Equipment, materials, and fixtures indicated on the drawings and schedules shown as Contractor furnished and installed, shall be furnished and installed by the Contractor.

1.2.1 Mechanical, Electrical, and Plumbing Work

Plumbing systems, including final connections, shall be in accordance with Section 15400 PLUMBING, GENERAL PURPOSE. Electrical equipment, motors, wiring, and final connections shall be in accordance with Section 16415 ELECTRICAL WORK, INTERIOR. Gas piping and accessories, including final connections, shall be in accordance with Section 15190 GAS PIPING SYSTEMS. Air-conditioning systems, duct work and accessories shall be in accordance with Section 15895 AIR SUPPLY, DISTRIBUTION, VENTILATION, AND EXHAUST SYSTEM. Painting shall be in accordance with 09900 PAINTING, GENERAL.

1.2.2 Kitchen Fire Protection Systems

Each exhaust hood system that serves cooking equipment, associated exhaust hood system ducts, and all cooking equipment served by the exhaust hood system shall be protected with a wet chemical fire extinguishing system. The wet chemical fire extinguishing systems shall be in accordance with Section 13965 WET CHEMICAL FIRE EXTINGUISHING SYSTEM. Grease extracting type hoods that have an internal hood fire protection system do not require wet chemical fire extinguishing protection for those components of the exhaust system, and for cooking equipment protected by a UL listed internal hood fire protection system complying to NFPA 96.

1.2.3 National Sanitation Foundation Standards

Food service equipment shall meet the requirements set forth by the National Sanitation Foundation (NSF). Acceptable evidence of meeting the requirements of the applicable NSF standards shall be either the equipment listed in the NSF Listing of Food Service Equipment and Related Products and display of the NSF seal on the equipment for the year the equipment was manufactured, a certification issued for special or specific food service equipment by NSF under their special one time contract evaluation and certification, or a certified test report from an independent testing laboratory, approved by the Office of the Surgeon General, indicating that the specific food service equipment has been tested and conforms to the

applicable NSF standards.

1.2.4 Verification of Dimensions and Coordination of Project Data

The Contractor shall become familiar with all details of the work and shall advise the Contracting Officer of any discrepancy before performing any work. The Contractor shall perform the following:

a. Horizontal and vertical dimensions shall be field verified.

b. Contract drawings and submittal data shall be reviewed for accuracy and completeness.

c. The installed utility capacity and location shall be field checked.

d. Critical systems/components shall be reviewed for application and capacities such as for exhaust hoods, refrigeration systems, fire suppression systems, gas, water, and steam/condensate line sizes and manifold configurations.

e. Delivery shall be coordinated for access through finished openings and vertical handling limitation within the building.

1.2.5 Standard Products

Materials and equipment shall be the standard products of manufacturer regularly engaged in the manufacture of the products and shall essentially duplicate items that have been in satisfactory use for at least 2 years prior to bid opening. The experience used shall include applications of equipment and materials under similar circumstances and of similar size. When two or more of the same products are supplied they shall be products of one manufacturer. Equipment shall be supported by a service organization that is, in the opinion of the Contracting Officer, reasonably convenient to the site.

1.2.6 Waste Pulping Products

a. Manufacturer regularly and presently manufactures food waste pulping systems as one of their principal products.

b. Installer has the technical qualifications, experience, trained personnel, and facilities to install specified items.

c. There is a permanent service organization, maintained or trained by the equipment supplier, which will respond to a service call within 24 hours with a fully equipped service vehicle and trained service person. Submit name and address of service organization.

d. Manufacturer has equivalent product presently installed in three installations similar to this project for three years, and has been in satisfactory and efficient operation for that period of time. Submit list of installations.

1.2.7 Nameplates

Each item of equipment shall bear a stainless steel, aluminum, or engraved polyester nameplate, as standard with the manufacturer, located in a conspicuous position and permanently fastened to the equipment. Name or identification plates shall be of the size standard with the manufacturer

for the particular piece of equipment provided. Name plates shall reflect the name of the manufacturer/trade name, serial number, make, and model number, pertinent ratings, operating characteristics, and other information as standard with the manufacturer, date of manufacture, electrical characteristics, and other applicable data, such as flow rate, temperature, pressure, capacity, and material of construction. Separate equipment identification plates with the contract number marked thereon, shall be securely fastened to the surface of each piece of equipment.

1.2.8 American Gas Association Laboratories Standards

Gas-burning equipment shall be designed for operation with the type of gas specified and shall be approved by AGAL. Acceptable evidence of meeting the requirements of the applicable AGAL-01 standards shall be either AGAL mark on equipment, a photostatic copy of the AGAL appliance certificate, a listing of the specific food service equipment or appliance in the AGAL Directory of Certified Appliances and Accessories, or a certified test report from a nationally recognized independent testing laboratory, indicating that the specified equipment has been tested and conforms to the requirements of the applicable AGAL standards.

1.2.9 Underwriters Laboratories Standards

Electrically operated equipment shall be in accordance with applicable UL standards such as UL 471, UL 489, UL 710 and UL 197. Evidence of meeting the requirements shall be a UL label on the equipment, a UL listing mark per UL-02 or a certified test report from a nationally recognized independent testing laboratory indicating that the specific food service equipment has been tested and conforms to the applicable UL standards.

1.3 SUBMITTALS

Government approval is required for submittals with a "G" designation; submittals not having a "G" designation are for information only. When used, a designation following the "G" designation identifies the office that will review the submittal for the Government. The following shall be submitted in accordance with Section 01330 SUBMITTAL PROCEDURES:

SD-03 Product Data

Food Service Equipment; G, RE.

Manufacturer's descriptive and technical literature, performance charts and curves, catalog cuts, and installation instructions. Brochures shall have front and rear protective covers with labeled project name and include an index indicating item number, quantity, description, and manufacturer, a fly sheet for each component indicating item number, name, quantity, manufacturer, optional equipment, modification, special instruction, and utility requirements, and catalog specifications sheets.

SD-02 Shop Drawings

Food Service Equipment; G, RE.

Data consisting of a complete list of equipment and materials. Detail drawings showing complete wiring, piping, and schematic diagrams, and any other details required to demonstrate that the system has been coordinated and will properly function as a unit. Drawings shall show proposed layout and anchorage of equipment and appurtenances, and equipment relationship to

other parts of the work, including clearances for maintenance and operation.

a. Detail drawings by Contractor shall be separate drawings and shall be the contractor's standard sheet size, but not smaller than the contract drawings, and indicate the food service equipment and cold storage assemblies with itemized schedule, and special conditions drawings indicating size and location of slab depressions, cores, wall openings, blockouts, ceiling pockets, blocking grounds, ceiling, wall, access panels, and above ceiling hanger assemblies, rough-in plumbing/mechanical systems and rough-in electrical systems

b. Detail drawings by manufacturer shall be separate drawings; sheet size shall be manufacturer's standard size and indicate item number, name, and quantity, construction details, sections, and elevations, adjacent walls, columns, and equipment, plumbing and electrical schematics, and fabricated fixtures with single electrical or plumbing connection, and service access panels required for maintenance or replacement of mechanical or electrical components.

c. Detail drawings by the Contractor that show the size, type, and location of equipment drain lines, and floor drains. Drawings shall indicate drain lines from equipment, distances of drain lines and floor drain receptacles from equipment and aisles, and elevation views of drain piping and floor drains.

SD-06 Test Reports

Testing

Test reports in booklet format showing all field tests performed to prove compliance with the specified performance criteria, upon completion and testing of the installed system. Each test report shall indicate the final position of controls.

SD-10 Operation and Maintenance Data

Food Service Equipment; G, RE.

Six complete copies of the service manual, not later than 3 months prior to the date of beneficial occupancy, with data for each different item of material and equipment specified. Service manuals shall include:

a. Front and rear protective covers with labeled project name.

b. Index indicating item number, quantity, description, manufacturer's name, and model number.

c. Maintenance instructions for stainless steel and plastic laminate.

d. Manufacturer's catalog specification sheets and manufacturer's detail and control drawings.

e. Manufacturer's operation manual outlining the step-by-step procedures for equipment installation, startup, basic operation features, and operation shutdown.

f. Manufacturer's maintenance manual listing routine maintenance

procedures, possible breakdowns, repairs, and troubleshooting guides. The instructions shall include simplified diagrams for the equipment as installed.

g. Manufacturer's list of parts and supplies with current unit price and address of manufacturer's parts supply warehouse.

1.4 DELIVERY AND STORAGE

1.4.1 Delivery

Unless otherwise directed, the following procedures shall apply:

a. Field assembled fixed equipment integrated into structure shall be sent to jobsite when required.

b. Fixed equipment not integrated into structure shall be sent to the jobsite after completion of finished ceilings, lighting, and acidizing of the finished floor and wall systems, including painting.

c. Major movable equipment shall be delivered to inventory in a secured area for interim jobsite storage, or if secured area is not available, when fixed equipment installation/clean-up has been completed.

d. Minor appliances and loose items shall be delivered to the jobsite when the Contracting Officer is prepared to receive and inventory such items.

1.4.2 Storage

Items delivered and placed into storage shall be stored with protection from weather, humidity, and temperature variation, dirt and dust, or other contaminants.

1.4.3 Protection of Fixed/Fabricated Manufactured Equipment

Fiberboard or plywood shall be taped to surfaces as required by equipment shape and installation access requirements.

1.4.4 Prohibited Use of Equipment

Food service equipment shall not be used as tool and material storage, work bench, scaffold, or stacking area.

1.4.5 Damaged Equipment

Contractor shall immediately submit documentation to the Contracting Officer with a recommendation of action for repair or replacement and the impact on project schedule.

PART 2 PRODUCTS

2.1 MATERIALS

Materials shall conform to the following:

2.1.1 Stainless Steel, Nonmagnetic

ASTM A 167 or ASTM A 240: 18-8, 300 Series, austenitic, polished to No. 3 or 4 finish on exposed surfaces.

2.1.2 Stainless Steel Pipe and Tubing

ASTM A 269. Pipe and tubing shall be seamless or welded, of the gauge specified, of true roundness, and of material as specified for stainless steel. Seamless tubing shall be thoroughly annealed, pickled, and ground smooth. Welded tubing shall be thoroughly heat-treated, quenched to eliminate carbide precipitation and then drawn true to size and roundness, and ground. Tubing shall be given a No. 3 or 4 finish when exposed to view.

2.1.3 Galvanizing Repair Compound

ASTM D 520, Type I pigment.

2.1.4 Brazing Material

AWS A5.8, class shall be as applicable.

2.1.5 Steel Structural Shapes for Framing

ASTM A 36. Structural shapes shall be uniform, ductile in quality, and shall be free of hard spots, runs, checks, cracks and other surface defects. Sections shall be galvanized by the hot-dip process, conforming to ASTM A 123.

2.1.6 Coatings

Coatings shall be of a durable, nontoxic, nondusting, nonflaking, and mildew-resistant type, suitable for use with food service equipment and in conformance with NSF Std 2. Application shall be in accordance with the recommendations of the manufacturer.

2.1.6.1 Exterior Parts

Exterior, galvanized parts, exposed members of framework, and wrought steel pipe, where specified to be painted, shall be cleaned, and free of foreign matter before applying a rust inhibiting prime and two coats of epoxy-based paint in accordance with Section 09900 PAINTING, GENERAL, unless otherwise specified. Color shall be selected by the Contracting Officer from manufacturer's standard colors.

2.1.6.2 Solder Material

ASTM B 32, Sn96.

2.2 COUNTERS

Counters shall be constructed in accordance with applicable portions of NSF Std 2.

2.2.1 Counter Tops

Counter tops shall be constructed of 1.9 mm (14 gauge) stainless steel with all seams and corners welded, ground smooth, and polished. Contractor shall be responsible to coordinate cut-outs to accomodate equipment located on top.

2.2.2 Cafeteria Counters

Cafeteria counters shall be constructed and sound deadened as indicated and as specified for counters.

2.2.3 Pitch and Drainage of Equipment Surfaces

Wherever a fixture has a waste or drain outlet, the surface shall have a distinct pitch toward such outlet. Corners shall be coved on 19 mm radius and sloped 10 mm per m maintaining level crown at front edges of rolled rims, marine edges, and backsplashes, when tops are sloped to drains.

2.2.4 Drip Gutter

Drip gutter shall be an integral part of the counter top and located below beverage dispensing faucets where indicated. Drip gutter shall be provided with a 25 mm brass drain tube centered in the bottom of the gutter. Bottom shall be pitched to the drain. The drip gutter shall be 100 mm wide, 25 mm deep, and the length indicated. The drip gutter shall be provided with a 100 mm wide, 25 mm high, removable, nonsplash, stainless steel, wire mesh strainer with frame. A cold water flush inlet fitting shall be installed at one end of the gutter, and shall have a faucet with quick disconnect connection mounted under the top.

2.2.5 Counter Edges and Backsplashes

2.2.5.1 Counter Edges

Counter edges shall be one of the following types:

a. Turned Down: Fifty millimeters at 90 degrees with 19 mm tight hem at bottom. Free Corners shall be rounded on 19 mm radius.

b. Marine Edge: Turned up 38 mm at 45-degree angle and turned down 50 mm at 135 degree angle with 19 mm tight hem at bottom.

c. Rolled Rim: Coved up 75 mm with 38 mm wide rim rolled 180 degrees and turned down to table top; hem edges, and bullnose corners.

2.2.5.2 Counter Backsplash

Counter backsplash shall be one of the following types:

a. Coved up 200 mm and sloped back 50 mm at the top on a 45-degree angle; 63 mm slope where piping occurs. Turned down 25 mm at 135 degrees at the rear of the splash with the ends closed to the bottom of the top turn down. Splash turn down shall be secured to wall with 100 mm long, 1.9 mm (14 gauge) stainless steel "zee" clips anchored to wall, 900 mm on center.

b. Turned up 100 mm at 90 degrees on 16 mm radius with edge turned back 25 mm at 90-degree angle with 25 mm turn down at 90 degrees at rear of splash with the ends closed to the bottom of the top turn down. Splash turn down shall be secured to wall with 100 mm long, 1.9 mm (14 gauge) stainless steel "zee" clips anchored to wall, 900 mm on center.

c. Turned up 150 mm at 90 degrees on a 16 mm radius with edge turned

back 50 mm at 90 degree angle with the ends closed to the bottom of the top turn down. Splash turn down shall be secured to wall with 100 mm long, 1.9 mm (14 gauge) stainless steel "zee" clips anchored to wall, 900 mm on center.

2.2.6 Counter Top Support Angles

Counter top support angles shall be of 38 by 38 by 3 mm painted galvanized steel angles with all corners mitered, welded, and ground smooth at perimeter. Cross members shall be provided on 600 mm centers maximum. A 100 by 100 mm, 2.7 mm (12 gauge) stainless steel triangular pad shall be provided where leg gussets are welded to the frame. Angle frame shall be stud bolted to counter top.

2.2.7 Sound Deadening of Counters and Sinks

Counter tops and sinks shall be sound deadened with 13 mm wide rope sealant positioned continuously between all contact surfaces of the frame-members and the underside of counter top, overshelves and undershelves. Stud bolts shall be tightened for maximum compression and the excess sealant trimmed.

2.3 COUNTER BASES

Counter bases shall be open or closed as indicated.

2.3.1 Closed Bases

Closed bases shall be constructed with 38 mm by 38 mm, 3 mm galvanized steel angle with all corners mitered, welded, and ground smooth. Horizontal and vertical angles shall be provided on 600 mm centers or less. The enclosure panels on closed bases shall be of 1.3 mm (18 gauge) stainless steel. Joint trim on enclosed bases shall be 50 mm wide, 1.9 mm (14 gauge) stainless steel, attached with concealed stud bolts and sealed to interior partition. Enclosed bases shall be double walled on interior, exposed ends, and at interior exposed partitions. Service access shall be provided for utilities supplying equipment designed to fit atop the counter.

2.3.2 Open Bases

Open bases shall be constructed of 41 mm outside diameter, 1.6 mm (16 gauge) stainless steel rails welded 360 degrees to the legs.

2.3.3 Gussets

Gussets shall be stainless steel, fully enclosed, a minimum of 75 mm in diameter at the top, reinforced with a bushing, and shall be continuously welded to channel or angle.

2.3.4 Legs

Legs shall be of 1.6 mm (16 gauge), 41 mm outside diameter stainless steel tubing. Legs shall be continuously welded to gussets, channel, or angle as specified.

2.3.5 Feet

Feet shall be sanitary, die-stamped stainless steel bullet-shaped, fully enclosed and shall provide for a 25 mm adjustment without threads being exposed. The bottom of the legs shall be finished off smoothly and the

stem overlapped to provide a sanitary closed fitting. Feet for free-standing fixtures requiring utility connections shall be as above except with a flanged plate at the bottom which shall be anchored to the floor with noncorrosive bolts.

2.3.6 Undercounter Shelving

Contractor shall be responsible to coordinate cut outs in shelves to accomodate equipment on top/through them.

2.3.6.1 Open Base Shelves

Open base shelves shall be constructed of 1.6 mm (16 gauge) stainless steel with all edges turned down 38 mm at 90 degrees with a 19 mm tight hem at bottom. Corners shall be notched a full 90 degrees and welded from underside to completely fill the gap, ground and polished. Undershelf shall be braced with 25 mm by 100 mm, 1.9 mm (14 gauge) stainless steel channel at longitudinal center line and between each intermediate pair of legs.

2.3.6.2 Closed Base Shelves

Interior shelves on closed bases shall be constructed of 1.6 mm (16 gauge) stainless steel. Side edges of the shelf shall be turned up 50 mm at 90 degrees on a 6 mm radius and sealed to the side walls. Rear of the shelf shall be coved up at 90 degrees on a 16 mm radius to shelf above or counter top, flanged out for attachment with no open space at interior. Vertical joints shall be sealed. Front edge shall be turned down 50 mm at 9O degrees with a 19 mm tight hem. The vertical seam of shelf turn down/turn up shall be welded to the face of body partition. Maximum depth of shelves shall be 700 mm. Shelves shall be reinforced with 25 mm by 100 mm, 1.9 mm (14 gauge) stainless steel closed hat channel. Shelf slides, where indicated, shall be 1.9 mm (14 gauge) stainless steel, 38 mm by 38 mm angles, and shall have front and back corners rounded and finished smooth.

2.3.7 Tray Slides

Tray slides shall be solid type. The width of the tray slides shall not be less than 360 mm. The mounting height of the tray slides shall be 850 mm above the finished floor. Tray slides shall be installed true and level. Tray slide shall be designed and installed to preclude tray spillage.

2.3.7.1 Solid Type Slide

Solid type slide shall be constructed of 1.9 mm (14 gauge) stainless steel with the front edge rolled 44 mm at 180 degrees. The top edge of the roll shall be 10 mm above the flat surface of the slide. Two inverted "V" forms, approximately 10 mm high, shall be provided in the flat surface of the slide as the running surface for trays. The back edge of the slide shall be turned up 25 mm at 90 degrees behind counter top turn down. Ends of the slide shall be closed to eliminate sharp edges.

2.3.7.2 Support Brackets

Support brackets for tray slides shall be stainless steel , and shall be secured to the trim strip of the counter with stainless steel truss head bolts. Brackets shall not be spaced more than 1200 mm, center to center.

2.3.8 Protector Shelf

Protector shelf shall be installed on the serving line counters and shall be located over the equipment as indicated. Protector/serving shelf shall be constructed of 1.6 mm (16 gauge) stainless steel, with a minimum width of at least 300 mm, and shall have a full 25 mm skirt with 19 mm tight hem on all sides and shall be supported on stainless steel uprights, at front. All free corners shall be rounded on a 19 mm radius.

2.3.8.1 Heat Lamps

Heat lamp units shall be provided with consolidated chassis of longest possible length for multiple sections. Heat lamp units shall have integral incandescent display light with warm white lamps and shall be wired to a recess mounted infinitely adjustable heat control with pilot light for each separate section. Heat lamps shall be secured tightly to the underside of the serving shelf and shall have a "USDA" approved heat protector provided between the heat lamps and the shelf. Maximum allowable temperature at the top of a serving shelf shall be 49 degrees C.

2.3.8.2 Fluorescent Display Light Modules

Fluorescent display light modules (not included with heat lamps) shall be in 450 mm and 900 mm increments, each with deluxe white T-8 energy efficient lamps. Display lamps shall be wired to a single recess mounted master switch per serving shelf.

2.3.8.3 Heat Lamp/Display Wiring

Heat lamp/display wiring shall be concealed in a corner post.

2.3.8.4 Protector Glass

Protector glass sheet shall be no less than 6 mm thick in transparent, tempered plate glass or heat- and mar-resistant clear acrylic framed in an all welded stainless steel channel edging and shall be installed under the protector shelf and in front of the food display. At the top and bottom of the installed glass shall be a 25 mm space for vapor venting. The protector glass or clear acrylic shall be pivoted for easy cleaning. Design shall be such that glass or clear acrylic can be replaced in the event of breakage.

2.3.8.5 Food Shield

Food shield/self serve shall conform to NSF Std 2 and be constructed of 1.6 mm (16 gauge) stainless steel, with a minimum width of at least 300 mm and shall have a full 25 mm skirt with 19 mm tight hem on all sides and shall be supported on stainless steel uprights at front. All free corners shall be rounded on 19 mm radius.

a. Adjustable louver brackets below the top shall be fitted with 6 mm polished, tempered plate glass or heat and mar-resistant clear acrylic framed in an all welded stainless steel channel and shall be installed with a 175 mm clearance above counter top.

b. Fluorescent light fixtures shall be installed the full length of the none heated undershelf displays. Display light wiring shall be concealed in a corner post. Fixtures shall be prewired to a single recess-mounted master switch per serving shelf.

2.4 DISH COUNTERS

Dish counters shall be constructed and sound deadened as indicated and as specified for counters and sinks. The dish counters shall be fitted and flanged into the dishwashing machine with a water-tight joint.

2.4.1 Dish Counter Support Channels

Dish counter support channels shall be 25 mm by 100 mm by 25 mm, 2.7 mm (12 gauge) stainless steel. Channels shall be provided under dish counter top between each pair of legs and shall have closed ends. Cross members, on the centerline, shall be provided between legs. Channels shall be stud-bolted to counter top at 150 mm on center, maximum.

2.4.2 Dish Counter Components

2.4.2.1 Scupper Drain

Scupper drain shall be provided the full width of dish counter with all corners coved, 150 mm wide by 50 mm deep, and integrally welded to the soiled/clean dish counter top at the entrance/exit of a rack-type dishwash machine. Bottom of the scupper drain shall be scored and sloped to 38 mm brass drain with tailpiece. Removable drainer shall be 1.6 mm (16 gauge) stainless steel, flush-mounted, pan-formed, perforated top, shall have 13 mm holes punched 38 mm on center, and shall be installed in the scupper opening on 13 mm diameter stainless steel legs with closed ends.

2.4.2.2 Prewash Sink

Integral prewash sink shall be 520 mm by 520 mm welded to the dish counter top with the corners rounded on 13 mm radius. The sink bottom shall be pitched to 1.6 mm stainless steel 38 mm brass drain. Removable rack support/slide assembly shall be a 520 mm square 1.6 mm gauge frame with two cross members. Two 25 mm by 3 mm stainless steel angle rack guides shall be welded on top of the frame at 500 mm apart with ends flared at 45 degrees.

2.4.2.3 Prerinse Spray

A prerinse spray assembly shall be mounted on the backsplash of the dish counter with vertical tubing, wall bracket, flexible gooseneck hose, and self closing squeeze-type valve and spray.

2.4.2.4 Hose Bib Faucet

A hose bib faucet shall be mounted on a 2.7 mm (12 gauge) stainless steel flange or inverted gusset below top of counter, which shall be ground and polished to match counter top.

2.4.2.5 Undershelves

Undershelves shall be the solid type, and shall be constructed as specified for open base shelves.

2.4.2.6 Scraping Trough

Scraping trough in the soiled dish counter shall be 1.9 mm (14 gauge) stainless steel with all corners (19 mm (3/4 inch) coved, and shall be integrally welded to the dish counter. Trough shall be 200 mm wide minimum

and shall be sloped 1 percent (1/8 inch per foot) or from 100 mm depth to integral disposer or prewash sink. Long sides of trough shall be formed on a 60 degree angle with a 13 mm by 13 mm recessed shoulder at juncture of the dish counter. Removable trough covers shall be 197 mm by 500 mm, 1.6 mm (16 gauge) stainless steel, pan formed, and the top shall be perforated (13 mm diameter holes punched 38 mm on center). One trough cover shall be provided for each 900 mm of trough. One inlet fitting shall be installed at the shallow end of the scraping trough, and intermediate inlet fittings shall be installed at 1200 mm on center. Inlet fittings shall be piped to a blending valve, vacuum breaker, solenoid valve, and shall have a globe valve at each intermediate inlet. Integral disposer sink shall be 450 mm by 450 mm by 188 mm deep, 1.9 mm (14 gauge) stainless steel with all corners coved, welded to dish counter/scraping trough and shall be fitted with a removable silverware-trap. Removable flush cover shall be 1.6 mm (16 gauge) stainless steel, 13 mm pan-formed, and perforated (13 mm holes punched at 38 mm on center) with welded corners. A finger ring shall be provided for the removal of the cover. Support clips shall be 6 mm diameter stainless steel rod, 50 mm long, formed at 45 degree angle with two 19 mm leg ends (6 mm long threaded ends). Rod-clips shall be inserted through tight clearance holes in sink corners, and sealed watertight and shall be secured with stainless steel acorn-nuts or tack-welded at exterior of sink wall. Support clips shall be set for a flush cover position (approximately 13 mm below top). A solenoid valve shall be interconnected with the disposer delay-relay control to initiate the blended water flow when the disposer is activated. All inlet fittings shall have 13 mm stainless steel tubing from blending valve to inlet fittings. Exposed fittings shall be chrome plated.

2.4.3 Glass/Cup Rack Overshelf

Glass/cup rack overshelf shall be 1.9 mm (14 gauge) stainless steel with a 38 mm deep "Vee" trough at free long sides with a 25 mm tight hem at inside of trough. A 13 mm marine edge shall be provided at free ends and a 100 mm high splash at the wall.

a. Shelf shall be suspended with bottom edge at 450 mm above counter top.

b. Drain tubes shall be provided at each end of trough through the backsplash to 19 mm above top of table.

c. A horizontal rack rest of 41 mm outside diameter stainless steel tubing shall be provided the full length of the shelf and shall be supported 250 mm above the shelf on 31 mm outside diameter stainless steel tubing spaced at 1500 mm on center.

2.4.4 Dish/Tray Return Shelf

Dish/tray return shelf shall be sized as indicated on the drawings. Shelf shall extend through opening in wall to be flush with the wall at the deposit side. Shelf shall be turned down 25 mm at 90 degrees at the front with 19 mm return at bottom. Rear long side shall be turned down 25 mm at 90 degrees, and shall be integral with conveyor slider pan and or dish counter whenever adjacent.

2.5 CONVEYOR

Conveyors shall be roller assemblies as noted in "DESCRIPTION" column in 11400, gravity operated, soiled dish type, to transport standard 350 mm x

450 mm cafeteria trays constructed in accordance with NSF Std 2 in two areas and dish racks in others, and shall be sized with configuration as indicated in drawings.

2.5.1 Trough

The conveyor shall have a one-piece seamless pan constructed of 2.0 mm stainless steel. All horizontal and vertical corners shall be reinforced with 2.7 mm stainless steel closed channels. Conveyor pan edges shall be turned up 75 mm at 90 degrees to form rolled rim. Pan shall be sized to transport standard 356 mm x 457 mm cafeteria trays. Slider pan shall be mounted on "U" shaped supports of 2.7 mm stainless steel, at 1500 mm on center. Legs shall be provided as specified for gussets, legs and feet.

2.5.2 Roller Assemblies

Roller sections to be plastic, tubing style, with stainless steel ball bearings. Rollers to be mounted on stainless steel side rails formed to maintain trays in proper alignment with top and bottom hemmed for added rigidity. Each section end of frame fitted with stainless steel plate notched for easy removal. Roller section mounted in trough to allow for free movement of trays without drag.

2.5.3 Waste Pulping System

All components, excluding piping, of the waste pulping system shall be supplied by a single manufacturer. The system shall be capable of processing the amount of waste noted under "DESCRIPTION."

2.5.3.1 Extractor

a. Press assembly fabricated of corrosion resisting stainless stele including housing, screw assembly, discharge assembly and other components in contact with slurry or extracted pulp.

b. Automatic wash-down of screen with fresh water.

c. Controlled moisture content of extracting pulp.

d. Totally enclosed fan cooled motor mounted to gear reducer.

e. Extracted waste return pump to pulpers for re-use, pump with fresh water flushed mechanical seal to protect drive shaft.

f. Diaphram actuated additive injector pump(s) with 19 liter additive tank for defoamer, deodorizer, disinfectant and cleanser.

g. Wall mounted NEMA 4 enclosure pre-wired control panels magnetic circuit breakers interlocked with door handle, low voltage and three leg thermal overload protection.

h. Chemical treatment for vermin and odor control.

2.5.3.2 Waste Pulping Disposer and Waste Pulping Unit

a. Housing: Cast iron, corrosion resisting stainless steel, or corrosion resisting aluminum alloy with water connection into grind chamber.

b. Grind ring: Rust resistant steel alloy with cutting teeth hardened and precision ground. Replaceable without replacing housing.

c. Rotor: Rust resistant alloy with hardened steel impellers, connected directly to motor shaft and dynamically balanced. Replaceable without replacing other components.

d. Motor: Continuous duty, splashproof, permanently lubricated, vertical shaft, with water seal.

e. Control Center: Prefabricated, containing:

(1) Magnetic starter
(2) Solenoid valve
(3) Time delay relay
(4) Control circuit transformer
(5) Floor control interlock switch
(6) CRS NEMA 4 enclosure to house (1) through (5)

f. On-Off Switch: Push buttons in corrosion resisting stainless steel NEMA 4 enclosure mounted on table near disposer.

g. Floor Stand

h. Silver Trap

i. Accessories: Corrosion resisting stainless steel cone and cover.

2.5.3.3 Soiled Dishtable

Table shall be one-piece, seamless, construction of 1.9 mm (14 gauge) stainless steel integral with trough, landing shelf and adjacent dishtable surfaces. Table shall be turned up 250 mm at 90 degrees and back at 45 degrees where table is against wall surfaces, turned up 75 mm at 90 degrees on all non-wall areas to form rolled rim. Table shall be mounted on 2.7 mm (12 gauge) stainless steel closed end channel supports 1500 mm on center. Legs shall be provided as specified for stainless steel gussets, legs, crossrails, and feet. Ninety degree table turns shall be equipped with 2.7 mm (12 gauge) stainless steel guide, complete with antifriction device. All corners shall be 19 mm coved radius.

2.5.3.4 Roller Assemblies

Roller sections shall be (PVC plastic) (stainless steel, tubing style, with stainless steel ball bearings. Rollers shall be mounted to stainless steel hex shafts, set in 2.7 mm (12 gauge) stainless steel side rails formed to maintain trays in proper alignment. Each section end of frame shall be fitted with stainless steel plate notched for easy removal. Roller section shall be mounted in trough to allow for free movement of trays without drag. Curved sections shall have 1.9 mm (14 gauge) side rails with two rollers per shaft to negotiate corner turn.

2.6 SINKS

Sink shall be of the dimensions indicated and conform to the applicable requirements of NSF Std 2. Sinks shall be constructed of a minimum of 1.9 mm (14 gauge) stainless steel. Vertical and horizontal corners shall be rounded to a radius of not less than 19 mm with double walls at partitions.

Continuous 1.9 mm (14 gauge) stainless steel exterior filler panels shall be provided between compartments of multiple-compartment sinks and shall be ground and polished to match the adjacent surfaces. The sink bottom shall be scored and sloped to assure drainage to the waste outlet. Sinks shall be equipped with waste and overflow fittings, drain plugs with quick-opening valves, and faucets of the type specified. Faucet and drain plug, and overflow fitting shall be required for each sink compartment, unless otherwise indicated. Spout outlet of faucets shall be a minimum of 125 mm above the rim of the sink. Sink legs shall be as specified for counters, except that closed gussets shall be welded to the support channels. Sinks installed adjacent to walls or enclosures shall be anchored and sealed thereto. Sinks shall be sound-deadened as specified for counters.

2.6.1 Plumbing/Trim Requirements

2.6.1.1 Drain Plug and Overflow Fittings

Drain shall consist of a 38 mm quick opening brass body valve with side outlet overflow connection with a stainless steel twist lever handle. Removable perforated stainless steel strainer plate shall be not less than 75 mm in diameter. Overflow fittings shall consist of 31 mm diameter chrome-plated brass tubing of not less than 0.91 mm thickness connected to an overflow head in the back of the sink compartment. Overflow head shall have a removable perforated chrome-plated brass or stainless steel strainer plate of not less than 38 mm diameter. Overflow head shall be installed in die-stamped opening 25 mm below counter top.

2.6.1.2 Backsplash-Mounted Faucets

Backsplash-mounted faucets shall be combination fitting-type with an exposed body and concealed supply connections at the back of the sink. Fitting shall have a swinging spout of approximately 200 mm in length and inlets with 19 mm pipe thread. Faucets shall have adjustable flanges. Valves shall have indexed metal lever handles and replaceable seats.

2.6.1.3 Counter Top or Ledge-Mounted Faucets

Counter top or ledge-mounted faucets shall be combination fitting-type with a concealed body and with the supply connections under the sink ledge or counter top. The faucets shall have replaceable valve seats, swinging spout elevated to clear valve handle, and four-arm or lever-style indexed metal handles. Chrome-plated copper alloy or stainless steel escutcheons for valves and spout, locknuts and washers or lock-nut type escutcheons together with coupling nuts, and 15 mm pipe size union-tailpieces shall be provided.

2.6.1.4 Control Valve Mountings

Gusset-shaped 1.9 mm (14 gauge) stainless steel panel for the control valves shall be mounted on open base fixtures with 88 mm setback from the countertop edge/rim to the valve handle.

2.6.1.5 Backflow Preventers

Backflow preventers shall be provided at each item of food service equipment having a water supply and waste connections, where the water inlet is connected below the flood level of the equipment. Backflow preventer shall be supplied of a size and proportion that will allow an

ample flow of water to the equipment, but will prevent the backflow of waste or polluted water into the water supply system. Backflow preventers shall be as specified in Section 15400 PLUMBING, GENERAL PURPOSE.

2.6.1.6 Water-Fill Faucets

Specialty food service water-fill faucets or hose assemblies shall be provided as indicated in drawings/specifications.

2.6.1.7 Water Hammer Arresters

Water hammer arresters shall be provided for food service equipment with quick-opening or solenoid-operated water valves. Each unit shall be installed in a vertical position.

2.6.2 Pot Washing Sinks

2.6.2.1 Final Rinse Compartment

The final rinse compartment of the pot washing sink shall be equipped with a booster heater for sanitizing.

2.6.2.2 Temperature Gauge

Temperature gauge shall have a 75 mm diameter face with stainless steel flange.

2.6.2.3 Valves, Temperature Gauge, and Controls Mounting

Valves, temperature gauge, and controls shall be installed in a stainless steel recessed panel, ready for final connections. A perforated stainless steel casing shall be provided over the temperature bulb.

2.7 EXHAUST HOODS OVER COOKING EQUIPMENT

Hoods and duct work systems shall conform to ACGIH-01, NFPA 96, and SMACNA-06. Hoods shall be U.L. listed per UL 710 and NSF approved. These standards represent only the minimum requirements; subsequent subsections of this clause may require construction that exceeds these minimum requirements. Unless otherwise specified, ducts and hoods shall be secured to building so as to be level and free from vibration under all conditions of operations.

2.7.1 Exhaust Duct

Exhaust duct for canopy or noncanopy hoods shall be constructed of 1.3 mm (18 gauge) stainless steel and shall have external seams welded continuously, liquid tight. Duct size shall be based on a minimum air velocity of 7.6 meters per second and maximum of 12.7 meters per second. Duct shall be continuously welded, liquid tight, to hood duct collar as required by NFPA 96.

2.7.2 Hood Support

Wall mounted or island type hoods shall be supported from the structure with stainless steel mounting brackets provided with hoods. Hanger rods shall be 13 mm diameter stainless steel, threaded at the bottom and designed at the top to fit into inserts in building slats above or shall have hanger attachments fastened to structural steel members. Hanger rods

shall be spaced 1200 mm on center, maximum.

2.7.3 Integral Make-up Air System

Make-up air diffusers shall be provided at the front panel and at the exterior length of the hood producing a low velocity discharge. The supply air plenum shall have a 25 mm thick foil-faced fiberglass insulation at the interior of the plenum.

2.7.4 Hood Lights and Wiring

Fixtures shall be U.L. Listed, recessed mounted, vapor proof fluorescent fixtures located along the full length of hood. The light fixtures shall be prewired to junction box on top of the hood. Regular or deluxe cool-white T-8 energy efficient fluorescent lamps shall be supplied. Hoods shall be factory prewired and shall have a single connection point. Hoods built in multiple sections shall be furnished with inter-connecting junction boxes for field connection of light fixtures.

2.7.5 Closure Panels

Vertical corner mullions, at removable closure panels, shall be 50 mm by 50 mm wide, 1.6 mm (16 gauge) stainless steel, and shall be welded integrally to the furring and head channel. Exhaust hood closure panels shall be 13 mm pan-formed, 1.3 mm (18 gauge) stainless steel. Upper edge of panels shall be retained in 25 mm by 50 mm continuous 1.6 mm (16 gauge) stainless steel head channel secured to the hood superstructure. Lower edge of panels shall be mounted on perimeter furring cap, and shall be turned back 25 mm and flanged up 25 mm for "zee" clip retention.

2.7.6 Wall Panels

Double pan-formed wall panels shall be 1.3 mm (18 gauge) stainless steel, 13 mm thick with internal stiffener members. The panels shall be filled with a "USDA Approved" thermal insulation the full height and width of panels, and shall be attached to the interior with mastic. Maximum allowable temperature at rear side of panel shall be 49 degrees C. Lower edge and sides shall be leveled and squared. Panels shall have butt joints.

2.7.7 Hand Held Fire Extinguishers

Hand held fire extinguishers shall be located at each exhaust hood and shall be suitable for gas, electric, and grease fires.

2.7.8 Grease Extracting Type Hoods

Grease extracting exhaust hoods shall be pre-engineered, factory fabricated and assembled with built-in washdown systems. Grease extracting exhaust hoods shall be of the size and type as indicated and shall be welded to the exhaust ductwork as required by NFPA 96. Hoods shall have a minimum grease extracting efficiency of 95 percent to be accomplished without the use of filters, cartridges or constant running water.

2.7.8.1 Construction

Construction shall be entirely of stainless steel. Grease extraction chamber and exhaust capture chamber shall be not less than 1.3 mm (18 gauge) stainless steel. Seams or joints that direct and capture grease laden vapors shall be continuously welded, with the weld ground and polished to

match the adjacent finish where exposed. The vertical joint where the front outside face of the hood meets the end panel of the hood shall be continuously welded, with the weld ground and polished to match the adjacent finish. Joints, seams, extractor chambers, and appendages shall be mechanically sound and sealed grease tight in accordance with the hood manufacturer's listing procedure and NFPA 96. Hoods over 3.6 m in length shall be provided in multiple, equal-length sections for mounting end to end; no section shall be less than 1.8 m in length. Hoods comprised of multiple sections shall be factory preassembled and provided with predrilled mounting holes and stainless steel fasteners. Welded field joints inside the capture area and exposed to view shall be, ground and polished to match the adjacent finish. Hoods shall be factory preplumbed and prewired and shall have a single connection point. Hoods built in multiple sections shall be furnished with unions and junction boxes for field connections. Grease extracting exhaust hoods shall be of the overhead type suitable for wall mounting . Steel mounting brackets shall be provided by the manufacturer.

2.7.8.2 Pass-Over-Type

Pass-over-type grease-extracting exhaust hoods shall be installed over griddles or fryers on service lines where prepared foods will be passed over the hood. Hoods shall have end exhaust outlet with upward direction. Hood shall prevent carbonization of grease in the extraction chamber.

2.7.8.3 Automatic Washdown System

Each grease extracting type exhaust hood shall include a built in washdown system consisting of stainless steel wash manifold(s) with brass spray nozzles. The washdown system shall remove accumulations of grease and other cooking process contaminants from the internal hood surfaces using a hot-water and detergent solution. The washdown system shall operate using water at a temperature of not less than 60 degrees C, at a flow pressure of 275 kPa minimum. A pressure reducing valve, when supply line pressure exceeds 345 kPa, shall be provided ahead of the hood control panel. The wash water and grease shall be collected within the hood(s), piped to the outside of the hoods, and interconnected to the building plumbing system through an air-gap hub assembly. Main supply water piping shall include a quarter turn ball-type shut-off valve conforming to MSS SP-72 or MSS SP-110 as applicable. As a minimum, a temperature/pressure gauge, water hammer arrester, line strainer, solenoid valve, flow check valve, detergent inlet fitting with check valve, detergent pump, detergent tank, and pump test switch shall be provided with the system. Controls, plumbing, and detergent components shall be located within a factory prewired control enclosure where indicated on the drawings. One control enclosure shall be provided for each exhaust hood or group of hoods served by a common exhaust fan. A vacuum breaker shall be furnished for the hot-water/detergent supply line from the control enclosure to the hood connection point. System operation shall be by a control system, including indicator lights, programmable clock timer, control relays and terminal blocks. "START" button shall start the exhaust fan and "STOP" button shall stop the exhaust fan and activate the timed wash cycle. System shall be capable of being activated either manually or thermostatically in the event of a fire.

2.7.8.4 Internal Hood Fire Protection

Grease extracting hoods shall be furnished with piping and nozzles for a fire protection system providing protection of the exhaust hood system, grease extractor, exhaust duct system, and the cooking equipment served by

the exhaust hood, per NFPA 96. Exposed piping and fittings shall be chrome-plated or stainless steel sleeved. Each grease extracting hood control panel shall be provided with a manual pull fire switch to activate the automatic washdown system and exhaust fan. Each hood shall be equipped with a full length, stainless steel fire damper located at the air inlet. In the event that a fire or heat in excess of 141 degrees C in the exhaust duct collars exists, a thermal switch shall automatically close the fire damper, turn on the automatic washdown system and turn off the exhaust and supply fans. The washdown system shall remain on as long as the thermostat is above it's activation temperature and once below that temperature run for an additional five minutes. Fire dampers shall be able to be open with a reset handle without the removal of access panels. Reset handle shall be located not greater than 2.1 m above the finished floor. The controls for the hood fire protection system shall be equipped with switches to shut-off fuel-fired and electric-powered cooking equipment served by the hood, when the internal hood fire protection system is activated. The hood fire protection system shall be equipped with normally-open contacts for activating the building fire alarm system.

2.8 CONDENSATE HOODS

Hood and duct work systems shall conform to ACGIH-01, SMACNA-06, and NFPA 96. Unless otherwise specified, ducts and hoods shall be secured to building so as to be level and free from vibrations under all conditions of operation. Supply and installation of exhaust fans for food service equipment and exhaust hoods shall be as specified in Section 15895.

2.8.1 Condensate Exhaust Hood Connection Provisions

2.8.1.1 Exhaust Duct for Canopy or Noncanopy Condensate Hoods

Ducts shall be constructed of 1.3 mm (18 gauge) stainless steel. External seams shall be welded and liquid-tight. Duct size shall be based on a minimum air velocity of 4.06 meter per second. Duct shall be continuously welded, liquid tight, to hood duct collar as required by NFPA 96.

2.8.2 Ducts at Dishwashing Machines

Ducts at dishwashing machines shall consist of two vertical ducts, one at each end of the dishwasher. Exposed, seamless, ducts shall be constructed of not less than 1.3 mm (18 gauge) stainless steel and shall be sized to accommodate the machine exhaust vent. The intake of each duct shall be at the top edge of the dishwasher and the ducts shall extend to 150 mm above the finished ceiling for final connection. The duct shall be trimmed at the ceiling with a 1.6 mm (16 gauge) stainless steel angle flange with corners welded. The exhaust outlet shall be connected to the exhaust system.

2.8.3 Condensate Exhaust Hoods

Hoods, exposed ducts, and enclosures over dishwashing machines and the rinse compartment of pot washing sinks shall be constructed of 1.6 mm (16 gauge) stainless steel with seams welded, ground, and polished.

2.8.3.1 Condensate Gutter

Hood shall be fabricated so as to form a condensate gutter 75 mm wide by 25 mm high at the perimeter and shall be provided with a condensate drain terminating at a floor sink location.

2.8.3.2 Duct Openings

Duct openings with collars shall be of quantity/size as indicated, with a stainless steel louvered grille at the openings. Penetrations of the dishwashing machine duct risers through the hood body shall be trimmed and sealed.

2.9 PREFABRICATED WALK-IN REFRIGERATORS

Refrigerators shall be prefabricated, commercial, walk-in type suitable for the intended use. Units shall conform to UL 207, UL 471, NSF-02 and NSF Std 7 floorless, design type and size as indicated, and the following:

2.9.1 Miscellaneous Requirements

2.9.1.1 Closure Panels

Closure panels and/or trim strips to the building walls and ceiling shall be installed with concealed attachments. Closure/trim shall be of the same material as the wall panels unless otherwise noted.

2.9.1.2 I-Beam Supports

Wherever compartment dimension exceeds the clear-span ability of ceiling panels, I-beam supports shall be provided on the exterior of the ceiling or supported by spline-hangers. Thirteen millimeter diameter steel rods shall be installed through beam/hangers and secured to the structure above. Beams or posts within compartments will not be acceptable.

2.9.1.3 Identification Signs

Engraved phenolic plastic compartment identification signs 300 mm by 50 mm high in selected color with 25 mm high letters shall be mounted on door above view window.

2.9.1.4 Door

Door panels inner and outer skins shall be of 1 mm patterned aluminum. Doors shall be filled with insulation 100 mm thick, and one per unit. Safety hardware shall conform to NSF-02. Hardware shall be stainless steel.

2.9.1.5 Strip Curtains

Transparent flexible vinyl reinforced strip curtains shall be provided which are anchored at top and able to be replaced individually. Strips shall be a minimum of 800 mm in width and 2 mm thick.

2.9.1.6 Door Stops

Door stops shall be provided, where necessary, to prevent walk-in refrigerator doors from striking adjacent walls, plumbing fixtures or food service equipment when door is open.

2.9.1.7 Protective Bumpers

The exterior side of refrigerator that are not installed against each other or against a wall shall be equipped with protective bumpers. Bumpers shall be fabricated from either 1.5 mm thick galvanized steel or stainless steel

channel or from solid rubber or rubber-like materials having a durometer A-hardness of 75+ 5.

2.9.1.8 Gasket

Gasket material shall be either natural or synthetic rubber and conform to NSF Std 2. Where frames are used, the panels shall fit together with gaskets that are designed for 50 percent compression.

2.9.1.9 Alarm System

An alarm system shall be provided consisting of a controller, pilot and warning lights, and audible alarm as specified by the manufacturer. The controller shall be equipped with normally-open and normally-closed contacts for remote monitoring of the temperature warning alarms and the power-off conditions.

2.9.2 Floor

2.9.2.1 Floorless Refrigerator Floors

Floorless refrigerator floors shall be flush with the surrounding building floor. The built-in floor shall be provided with two layers of 50 mm thick polyurethane board insulation with staggered joints set in mastic or other thickness of insulation as recommended by the manufacturer. In addition, a watertight seal formed by 0.152 mm polyethylene sheets with all joints lapped 150 mm and sealed, shall be provided on the surface of the subfloor which will support the insulation and the refrigeration floor. A 6.8 kg felt slip sheet shall be provided over insulation with 150 mm lapped joints flashed up the height of finished floor base. The subfloor and refrigerator floor shall each be not less than a 100 mm thickness of reinforced concrete with the insulation sandwiched between. The subfloor shall contain drain holes to drain water seepage. Beneath the floor screeds at refrigerator walls and partitions, the insulation shall be extended with a 50 mm thickness down to the insulation sandwiched between the subfloor and the refrigerator floor. The insulation beneath the door shall be as recommended by the manufacturer. The subfloor shall be supported on a fill of 50 mm clean rock aggregate having a minimum depth of 375 mm. In addition, the perimeter shall be embedded within the gravel fill to allow for air circulation.

2.10 WATER FILTER

A cartridge-type water filter shall be provided on water supply lines to equipment as shown.

2.10.1 Cartridge Filter

The filter shall remove dirt and off-taste items, such as chlorine and other medicined items. In addition, it shall reduce lime-scale problems when required by water conditions. The filter shall consist of a stainless steel pressure vessel, which includes shell top, bracket check valve, fittings and accessories, and plastic disposable cartridge. The cartridge shall be of the precoat filtration type in which a coating of particles is applied on a suitable fabric support. The filter shall contain not less than 90 percent activated carbon and 10 percent inert binders. The filter shall remove particles 2 microns and larger. The filter shall be installed with a three-position valve header, activation faucet, and by-pass valve which will be normally closed. In addition, an indication gauge shall be

provided to indicate when cartridge requires replacement.

2.10.2 Working Pressure and Flow Rate

The filter shall be installed as recommended by the manufacturer and be suitable for 860 kPa maximum working pressure at 38 degrees C water inlet temperature. Each filter shall have a nominal flow rate of 5.67 liters per minute. An additional replacement cartridge shall be provided for each filter.

2.11 ELECTRICAL WORK

Electrical systems, components and accessories shall be certified to be in accordance with NFPA 70 and the following:

2.11.1 Installed Equipment Load

Should the electrical load of the approved equipment differ from that specified or shown on the drawings, the contractor shall provide and install electrical service compatible with the approved equipment.

2.11.2 Electrical Equipment and Components

Food service equipment furnished under this section shall have loads, voltages, and phases compatible with building system, and shall conform to manufacturer standards.

2.11.3 Cords and Caps

Food service equipment cord/caps shall be coordinated with related receptacles. All 120/208/240 volt "plug-in" equipment shall have Type SO or SJO cord and a plug with ground, fastened to frame/body of item. Mobile equipment shall have a strain-relief assembly at the cord connection of the appliance. Mobile electrical support equipment (heated cabinets, dish carts, etc.) and counter appliances mounted on mobile stands (mixers, food cutter, toaster, coffee makers, microwave ovens, etc.) shall have cord/cap assembly with cord-hanger as provided by the manufacturer.

2.11.4 Switches and Controls

Each motor-driven appliance or electrically-heated unit shall be equipped with control switch and overload protection per UL 197 and UL 471. Switches, controls, control transformers, starters, equipment protection and enclosures shall be Industry standards for the equipment environment.

2.11.5 Motors

Motors at 120, 208 volts shall have starter with overload protection and short circuit motor protection per manufacturer standards.

2.11.6 Heating Elements

Electrically-heated equipment shall have thermostatic controls. Water heating equipment shall be equipped with a positive low-water shut-off.

2.11.7 Receptacles and Switches

Receptacles which are located in vertical panels of closed base bodies shall be installed in 300 mm by 215 mm by 75 mm deep recessed mounting

panel sloped on a 60-degree angle and turned up to the top of the opening. Receptacles which are located in closed base fixtures shall be prewired to a junction box located within 150 mm from the bottom of the utility compartment. Receptacles which are installed in/on fabricated equipment shall be horizontally-mounted in a metal box with a stainless steel cover plate.

2.11.8 Light Fixtures

Light fixtures with lamps which are installed in/on fabricated or field-assembled equipment shall be prewired to a junction box for final connection (fixtures shall be continuous run when indicated). Fluorescent display light shall be installed the full-length of the display stand and serving shelf with stud bolts or as indicated, and shall be prewired through a support post to a recess-mounted switch. Heat lamps shall be installed to underside of serving shelf assemblies as specified. Heat lamp length for chassis shall be sized per manufacturer or as indicated on the drawings. Cold storage light fixtures shall be electrically connected through the hub fitting located on the top of the fixture. Horizontal conduit shall be above the ceiling panels. Plastic sleeves shall be installed through ceiling panels for electrical conduit and the penetrations shall be sealed airtight at both sides of panel.

2.11.9 Final Electrical Connection Provisions

Final electrical connection points of equipment shall be tagged with item number, name of devices on the circuit, total electrical load, voltage, and phase. Fabricated equipment containing electrically-operated components or fittings, indicated on utility connections drawings to be direct-connected, shall have each component, fitting, or group thereof prewired to a junction box for final connection. Refer to the drawings for circuit loading. Field-assembled equipment (example, prefabricated cold storage assemblies, conveyor systems, exhaust hoods) shall have electrical components completely interconnected by this section for final connection as indicated on utility connection drawing. The following groups of cold storage assembly electrical devices shall be prewired to a top-mounted junction box for final connection per compartment grouping, unless otherwise indicated.

a. Light fixtures, switches, and heated pressure-relief vent.

b. Door/jamb heater and temperature monitors/alarms.

c. Evaporator fans, defrost elements, freezer fan door switch, and drain line heaters.

2.11.10 Lamps

Food service equipment containing light fixtures shall have standard appliance type bulbs or energy efficient appliance type bulbs as indicated on the drawings. Exposed fluorescent lamps above or within a food zone shall have plastic coated T-8 energy efficient lamps or standard lamps, sleeved in plastic tube with end caps.

PART 3 EXECUTION

3.1 INSTALLATION

Equipment shall be installed at locations shown in accordance with NSF-01 and the manufacturer's written instructions. The Contractor shall make

provision for the plumbing, heating, and electrical connections and for equipment indicated as being furnished and installed by the Government.

3.1.1 Equipment Connections

Equipment connections shall be complete for all utilities. Unless otherwise specified, exposed piping shall be stainless steel. Steam operating pressure shall be as indicated.

3.1.2 Backflow Preventers

Backflow preventers shall be furnished as specified in Section 15400 PLUMBING, GENERAL PURPOSE. The Contractor is responsible to install backflow preventers as shown on the contract drawings and at all other locations necessary to preclude a cross-connect or interconnect between a potable water supply and any source of nonpotable water, or other contaminant. Backflow preventers shall be installed at all locations where the potable water outlet is below the flood level of the equipment, or will be located below the level of the contaminant. Backflow preventers shall be provided of sufficient size to allow unrestricted flow of water to the equipment, and preclude the backflow of waste or other contamination into the potable water system.

3.1.3 Gas Equipment

Installation of equipment shall conform to NFPA 54. A heavy duty steel cable, 75 mm to 150 mm shorter than the equipment connector shall be fastened to the equipment and the walls.

3.1.4 Plumbing Work

Plumbing final connection points of equipment shall be tagged, indicating item number, name of devices or components, and type of utility (water, gas, steam, drain). Extensions of indirect waste fitting shall be provided to open-sight hub drain, floor sink or floor drains from food service equipment.

3.2 CONSTRUCTION OF FABRICATED EQUIPMENT

3.2.1 Grinding, Polishing, and Finishing

Exposed welded joints shall be ground smooth and finished to match the adjoining material. Wherever materials have been depressed or sunken by welding operation, such depressions shall be hammered and peened flush with the adjoining surface, and again ground to eliminate high spots. Ground surfaces shall then be polished or buffed to match adjoining surfaces. Care shall be exercised in the grinding operations to avoid excessive heating of the metal and metal discoloration. Abrasives, wheels, and belts used in grinding shall be free of iron and shall not have been used on carbon steel. In all cases, the grain of rough grinding shall be removed by several successively finer polishing operations. The texture of the final polishing operation shall be uniform, smooth, and consistent. The grain direction of horizontal stainless steel surface shall be longitudinal, including the splash back. Polishing at right angle corners shall provide a mitered appearance. Butt and contact joints shall be close fitting and not require solder as a filler. Wherever brake bends occur, the bends shall be free of open texture or orange peel appearance. Where brake work does mar the uniform appearance of the material, such marks shall be removed by grinding, polishing, and finishing. Sheared edges

shall be free of burrs, projections, and fins. Where miters or bullnosed corners occur, such miters and corners shall be finished with the underage of the material and ground to a uniform condition. Overlapping of material is not acceptable. Exposed stainless steel surfaces shall have a No. 3 or 4 finish. Finishes of materials, other than stainless steel, shall be comparable in appearance to commercial mill finish. Exposed surfaces shall include:

a. Exterior surfaces exposed to view.

b. Interior surfaces exposed to view in doorless cabinets.

c. Undersides of shelves shall have a ground finish of No. 90 grit or finer.

3.2.2 Fastening Devices

Fastening devices shall be of the same material as the metal being joined when joint pieces are of similar metal. Fastening devices shall be stainless steel when stainless steel is joined to dissimilar metal. Stud bolts shall be a minimum of M6 stainless steel with length necessary to accept washers, and required nuts, and shall be welded 225 mm on center maximum. Exposed surfaces of equipment shall be free of bolts, screws, and rivet heads. Stainless steel stud bolts shall be used to fasten tops of counters or tables to angle framing and trim to other surfaces. Such bolts shall be of the concealed type. Threads of stud bolts which are on the inside of fixtures and are either visible or might come in contact with a wiping cloth, shall be capped with chrome plated washers, lock washers, and chromium-plated brass cap nuts. Wherever bolts are welded to the underside of trim or tops, the reverse side of the welds shall be finished uniform with the adjoining surface of the trim or the top. Dimples at these points will not be acceptable.

3.2.3 Welding

3.2.3.1 Welding Rods

Welding shall be done with welding rods of the same composition as the sheets or parts welded.

3.2.3.2 Weld Quality

Welds shall be strong and ductile. Welds shall be free of imperfections such as pits, runs, spatter, cracks, low spots, voids, and shall be finished to have the same color as the adjoining surfaces. Butt welds made by welding straps under seams, or by filling in with solder, or by grinding will not be acceptable. Welded joints shall be homogeneous with the sheet metal. Spot welding shall not be substituted for continuous welding. Joints in tops of counters, tables, drainboards, exposed shelving, and sinks shall be joined by heli-arc welding or a process other than carbon-arc welding or one that will permit carbon pick-up. Joints shall be fully welded. Counter tops shall be factory welded into lengths as long as practical in order to reduce field welded joints to a minimum. Exposed welds shall be ground smooth, flush with adjacent surface and free of burrs and sharp edges. Wherever welds occur on nonfood contact surfaces not suitable for grinding or polishing, such welds and the accompanying discoloration shall be sandblasted and coated in the factory with a nontoxic metallic-base paint. Bolts and screws shall be welded by a process that will minimize the possibility of carbide precipitation. Welds

in galvanized steel made after galvanizing, and the adjacent areas where galvanizing is damaged, shall be cleaned and coated with galvanizing repair compound.

3.2.4 Soldering

Soldering shall serve only as a filler to prevent leakage and shall be made with solder material. Stainless steel requiring soldering shall first be cleaned of discoloration and then have a soldering flux applied. Excess or remaining flux and catalytic material shall be removed after the soldering has been completed, and the entire soldered joint and adjacent metallic surfaces shall be cleaned with a liquid alkaline or neutralizing agent to prevent any attack on the surrounding metallic surfaces by the soldering flux.

3.2.5 Brazing

Brazing shall be accomplished with brazing material. Brazing shall be used only on copper tubing to brass and bronze connection fittings.

3.3 TESTING

Equipment shall be inspected and tested under operating conditions after installation. If inspection or test shows defects, such defects shall be corrected, and inspection and test shall be repeated. Refrigerator tests shall include the following:

3.3.1 Performance Tests

A detail written test procedure shall be submitted prior to performance of tests. The Contractor shall furnish all instruments, test equipment, and personnel required for the tests; Government will furnish the necessary water and electricity for the installed equipment. Evidence shall be submitted that the instruments have been properly calibrated by an independent laboratory at the Contractor's expense.

3.3.2 Operating Tests

An operating test shall be performed on all items after complete installation and adjustment. The failed test item shall be corrected and the test shall be rerun.

3.3.3 Clean and Adjust

Debris resulting from this work, as the installation progresses, shall be removed from the jobsite. All food service equipment, prior to demonstration, shall be cleaned and polished, both interior/exterior. Drawer slides and casters shall be lubricated and adjusted. Pressure regulating valves, timed-delay relays, thermostatic controls, temperature sensors, and exhaust hood grilles shall be adjusted, as required, for proper operation. Faucet aerators and line strainers shall be cleaned or replaced. Damage to painted finishes shall be touched up.

3.3.4 Equipment Start-Up/Demonstration

The Contractor shall obtain the services of the manufacturer's representative experienced in the installation, adjustment and operation of the equipment specified. The representative shall supervise the start-up, adjustment, and testing of the equipment, prior to the demonstration.

Equipment shall be carefully tested, adjusted, and regulated in accordance with the manufacturer's instructions and shall be so certified in writing. A thorough operational demonstration shall be provided of all equipment and instructions furnished for general and specific care and maintenance. Selected items of equipment and attendees shall be scheduled, with the Contracting Officer, at least 2 weeks in advance of demonstration periods.

PART 4 ITEM SPECIFICATIONS

4.1 ITEM NO. 1 - RECEIVING SCALE ON MOBILE STAND

: Government furnished, government installed.

4.2 ITEM NO. 2 - RECEIVING DESK

Government furnished, government installed.

4.3 ITEM NO. 3 - SHELVING

Government furnished, government installed.

4.4 ITEM NO. 4 - HAND TRUCKS

Government furnished, government installed.

4.5 ITEM NO. 5 - SHELVING

Government furnished, government installed.

4.6 ITEM NOS. 6 & 6a - FREEZER CONDENSING UNIT AND EVAPORATOR

Contractor furnished, contractor installed. The freezer compartment refrigeration system shall be a pre-assembled remote split system with air-cooled direct expansion components. The evaporator shall be mounted at the ceiling of the freezer compartment, centered on the back wall, and the condensing unit shall be mounted on a concrete pad on grade outside the building. The entire refrigeration system shall be designed by the manufacturer to meet the design condition of 38 degrees C ambient air and -23 degrees C indoor temperature taking into consideration the altitude at the place of installation.

The freezer shall have an evaporator with (3) .37 K.W. motors operating at 208-60-1 phase and drawing 2.7 amps. The unit shall have an automatic electric defrost cycle which draws no more than 13.3 amps. The air cooled condensing unit shall have a 2.2 K.W. (3 HP)semi-hermetic compressor operating on R-404A refrigerant. Condensing unit shall be wired 208-60-3 phase and draw 11.5 full load amps. The evaporator shall be connected to the condensing unit and shall be controlled by the control circuit and timer in the condensing unit.

Furnished with the system shall be a liquid line dryer, liquid line solenoid, expansion valve, suction and discharge vibration arrestors, a timer for electric defrost, a moisture liquid indicator, suction line filter, a room thermostat, pre-wired control panel and high and low pressure control.

Evaporator shall be ceiling hung by 13 mm nylon bolts with stainless steel washers and nuts. Hanger bolts shall be inserted through plastic sleeves with the penetrations sealed airtight.

All refrigeration lines shall be extended from the condensing unit to the evaporator, and insulated after the system has been thoroughly checked for refrigerant leaks. The insulation shall be continuous for the full length of all copper lines. The refrigeration lines shall be supported approximately every 2500 mm and at all turns. The copper refrigeration lines shall be isolated from the metal hangers. All joints in the insulation shall be sealed with insulation sealer. All insulated refrigeration piping located outdoors and exposed shall be covered completely with plastic sleeving secured and sealed in place.

Any penetration of the insulated panels for electrical wiring and conduit, refrigeration lines, drain lines and/or other services shall be made through vapor tight sleeves that pass completely through the panels and are sealed to the exterior and interior metal surfaces to prevent the infiltration of air into the insulated cavity. Interior of all sleeves shall be filled with suitable low temperature caulking. The interior of all electrical conduit shall also be sealed.

Provide a type L copper, 25 mm condensate drain line from the evaporator drain pan to outside the freezer and discharge into a floor drain. Bottom of drain pan shall have a cast tee fitting with union and cleanout plug. Drain line shall be pitched 42 mm per meter for the full length and the end of the drain line above the floor drain shall have a "P" trap. Wrap the freezer drain line with electric heat tape and cover with 13 mm fiberglass pipe insulation.

Condensing unit shall be supplied with a stainless steel weatherproof outdoor housing, crankcase heater, and low ambient temperature head pressure controls. Condensing unit shall have an oil separator which shall be piped to compressor crankcase with a shut-off valve in return line. Condensing unit shall have a 300 mm by 50 mm engraved phenolic plastic identification sign in Contracting Officer's selection of color with 25 mm letters. Freezer compartment shall be complete with all the above specified equipment including refrigerant and all additional refrigeration equipment and accessories required to make a complete refrigeration system. System shall be installed in accordance with Section 2.11.1 of these specifications. The refrigeration system shall be completely installed as indicated on the plans with the electrical contractor connecting condensing unit, evaporator, solenoid, contactors, controls, lights, door heaters, threshold heaters, room thermostat and all component parts. Unit shall be charged and adjusted and after the initial start-up and adjustment, the installing contractor shall furnish a one year refrigeration service policy on a local level including all labor, material, refrigerant and mileage. Specifications are based on a W.A. Brown and Sons Model #LSF120B evaporator and a Model #BOPS300L6 condensing unit.

4.7 ITEM NOS. 7 & 7a - REFRIGERATOR CONDENSING UNITS AND EVAPORATORS

Contractor furnished, contractor installed. The three refrigerator compartments shall each have a separate refrigeration system consisting of a pre-assembled remote split system with air-cooled direct expansion components. The evaporators shall be mounted at the ceiling of each refrigerator compartment, centered on the back wall, and the condensing units shall be mounted on a concrete pad on grade outside the building. The refrigeration systems shall be designed by the manufacturer to meet the design condition of 35 degrees C ambient air and 2 degrees C indoor temperature taking into consideration the altitude at the place of installation.

Each refrigerator shall have an evaporator with (2) .75 K.W. motors operating at 120-60-1 phase and drawing 3.6 amps. The units shall have off-cycle air type defrost. The air cooled condensing units shall have a 0.75 K.W. (1 HP) semi-hermetic compressor operating on R-22 refrigerant. Condensing units shall be wired 208-60-3 phase with 6.3 minimum circuit ampacity. The evaporator and the condensing unit shall each be connected to a separate electrical circuit and shall be operated by a common thermostat furnished by the manufacturer.

Furnished with each system shall be a liquid line dryer, liquid line solenoid, expansion valve, suction and discharge vibration arrestors, a moisture liquid indicator, suction line filter, a room thermostat, pre-wired control panel and high and low pressure control.

Evaporators shall be ceiling hung by 13 mm nylon bolts with stainless steel washers and nuts. Hanger bolts shall be inserted through plastic sleeves with the penetrations sealed airtight.

All refrigeration lines shall be extended from the condensing units to the evaporators, and insulated after the systems have been thoroughly checked for refrigerant leaks. The insulation shall be continuous for the full length of all copper lines. The refrigeration lines shall be supported approximately every 2500 mm and at all turns. The copper refrigeration lines shall be isolated from the metal hangers. All joints in the insulation shall be sealed with insulation sealer. All insulated refrigeration piping located outdoors and exposed shall be covered completely with plastic sleeving secured and sealed in place.

Any penetration of the insulated panels for electrical wiring and conduit, refrigeration lines, drain lines and/or other services shall be made through vapor tight sleeves that pass completely through the panels and are sealed to the exterior and interior metal surfaces to prevent the infiltration of air into the insulated cavity. Interior of all sleeves shall be filled with suitable low temperature caulking. The interior of all electrical conduit shall also be sealed.

Provide type L copper, 25 mm condensate drain lines from the evaporator drain pans to outside the refrigerators and discharge into a floor drain. Bottom of drain pan shall have a cast tee fitting with union and cleanout plug. Drain line shall be pitch3ed 42 mm per meter for the full length and the end of the drain line above the floor drain shall have a "P" trap.

Each condensing unit shall be supplied with a stainless steel weatherproof outdoor housing, crankcase heater, and low ambient temperature head pressure controls. Each condensing unit shall have a 300 mm by 50 mm engraved phenolic plastic identification sign in Contracting Officer's selection of color with 25 mm letters. Each compartment shall be complete with all the above specified equipment including refrigerant and all additional refrigeration equipment and accessories required to make a complete refrigeration system. Systems shall be installed in accordance with Section 2.11.1 of these specifications. The refrigeration systems shall be completely installed as indicated on the plans with the electrical contractor connecting condensing units, evaporators, solenoids, contactors, controls, lights, door heaters, threshold heaters, room thermostats and all component parts. Units shall be charged and adjusted and after the initial start-up and adjustment, the installing contractor shall furnish a one year refrigeration service policy on a local level including all labor, material, refrigerant and mileage. Specifications are based on W.A. Brown

and Sons Model #LSC090A-1 evaporators and Model #BOPS100M23 condensing units.

4.8 ITEM NO. 8 - DOORWAY CLOSURES

Contractor furnished, contractor installed. Doorway closures shall be installed on the interior of the walk-in door openings (Items #10a, 10b, 10c and 10d) as shown on the plan. Each doorway closure shall consist of 2 mm thick clear plastic strips with rounded edges and with nylon cord reinforcement. Strips shall be USDA approved for food contact and shall withstand temperatures from -40 degrees C to +65 degrees C. Strips shall be 203 mm wide with a 50 mm overlap. Strips shall have an electronically heat sealed loop at the top and shall be installed on a 25 mm diameter aluminum bar mounted above the door opening on aluminum support brackets. The individual strips shall be easily removed for cleaning or replacement. Specifications are based on Curtron Model #M200-4796.

4.9 ITEM NO. 9 - FAUCET HOSE STATIONS

Contractor furnished, contractor installed. Faucet hose stations shall each consist of a hot and cold water washdown station with thermometer, mixing valve, 7620 mm hose, water gun and hose rack. Mixing valve shall be heavy duty chrome plated cast bronze construction with renewable disc, nickel alloy seats, integral check valve and cast bronze unions. Mixing valve shall have 20 mm inlets, 152 mm on center and a brass thermometer tee with a stainless steel thermometer with a range of 10 degrees to 260 degrees C. Atmospheric backflow preventers shall be provided for protection against both back siphonage and backflow. Hot water inlet shall be connected from the outlet of the Booster Heaters, Items #51a, except for hose station at waste pulping room which shall be supplied with 60 degree C hot water from piping in crwal space as shown. Mixing valve shall have an insulated hot water handle suitably labeled "82 degrees C Hot Water".

Hose shall be 20 mm diameter, 7620 mm long, white, oil resistant EPDM with braided high tensile synthetic textile cord, rated at 93 degrees C temperature and 1379 kPa working pressure. Hose shall have chrome plated brass swivel couplings at both ends. Water gun shall have a brass body with white protective rubber cover, front trigger design and 14 mm outlet orifice. Hose rack shall be constructed of stainless steel rod and shall be designed for wall mounting.

Specifications are based on T&S brass and Bronze Works Model #MJ-0771-11CW. At each station, provide a plaque for 82 degrees C hot water that reads, "DANGER, EXTREME HOT WATER" as indicated on drawings

4.10 ITEM NO. 10a, 10b, 10c, and 10d - WALK-IN FREEZER/REFRIGERATORS

Contractor furnished, contractor installed. Walk-in shall consist of a freezer compartment, a dairy refrigerator compartment and two vegetable refrigerator compartments. Walk-in shall be a prefabricated metal clad polyurethane insulated walk-in in the size, shape and arrangement as shown on the plan. Walk-in shall be floorless and shall be mounted to the insulated building floor by means of 41 mm high PVC floor screeds. Floor screeds shall be secured and sealed to the building floor.

This walk-in shall be constructed in accordance with the Underwriters Laboratories and the National Sanitation Foundation standards and shall bear their seals. Walk-in shall be built with 102 mm thick prefabricated sections. Panels shall consist of precision roll formed inner and outer

metal pans separated by foamed-in-place rigid urethane insulation. Panels shall have foamed-in-place double tongue and groove edges which are the same density as the rest of the panel. Panels shall have flexible vinyl gaskets on the interior and exterior perimeter of each panel. Panel edges shall have a minimum of three cam type locking assemblies foamed-in-place at time of fabrication. Cam locks shall be actuated from the interior of the walk-in and the wrench holes shall be furnished with stainless steel plugs. Each panel shall be completely filled with foamed-in-place urethane insulation and shall be tested for voids before leaving the factory. Insulation shall have a flame spread rating of 25 or less in accordance with ASTM E 84 and shall be certified with a UL label. The "K" factor shall be 0.121, the "U" factor shall not exceed 0.030 and the "R" factor shall be 33.3.

The interior walls and ceiling and the exposed exterior walls shall be 22 gauge type 304 stainless steel with #4 finish. All unexposed exterior walls and exterior top shall be 24 gauge galvanized steel.

Each walk-in compartment shall be provided with a flush entrance door located and hinged as shown on drawing. Each door opening shall measure 914 mm wide by 2134 mm high with both the interior and exterior of door fully covered with 22 gauge stainless steel with a #4 finish. Doors shall be fully insulated with 102 mm thick urethane foam. All door hardware shall be heavy duty type in brushed chrome finish with door to have three cam lift hinges, latch with keyed cylinder lock, padlock capability, and inside safety release. Doors shall be fitted with a 355 mm by 355 mm triple pane view port with heated glass and frame. Doors shall be equipped with magnetic gaskets and positive door closer. Door hinges and closers shall be suitable for the size of the door. Door jambs shall be equipped with perimeter anti-condensation heaters. Door jambs shall be fabricated with fiberglass reinforced plastic for high impact strength. The bottom of each door shall be equipped with special double sweep gaskets that seal the bottom of the door to the floor. Heater wires shall be provided below a 12 gauge stainless steel threshold plate below the entrance door. Threshold plates shall be flush mounted and sealed to the building floor in a concealed manner. The front of each door, above the view port, shall have a 300 mm by 50 mm engraved phenolic plastic identification sign in Contracting Officer's selection of color with 25 mm letters. Each door section shall be fitted with a recessed 64 mm dial thermometer.

Each door section shall have an incandescent light fixture with a light switch and pilot light mounted on the exterior door jamb below the thermometer. Each compartment shall be furnished with additional ceiling mounted light fixtures in quantities sufficient to achieve 22 watts per square meter of even light on the interior.

Each light fixture shall be furnished with a 100 watt incandescent light bulb and a coated glass shatterproof globe. The ceiling mounted light fixtures shall be field wired with a conduit and wiring extended on the top exterior of the walk-in and connected to thru-ceiling junction boxes. The interior and exterior of all electrical conduit and penetrations through the walk-in panels shall be sealed.

Provide and install matching 22 gauge stainless steel trim strips to close the gap between the walk-in and the building walls. Trim strips shall extend from the floor to the finished ceiling and shall be mounted and sealed to the building walls and walk-in walls in a concealed manner. Walk-in shall also be supplied with a fixed 22 gauge stainless steel closure channel extending from the top of the walk-in to the building

ceiling on the exposed front as required. Mounted to the walk-in wall along the front between the door openings shall be a continuous 16 gauge stainless steel hat channel bumper rail. The bumper rail shall be mounted 500 mm above the finished floor in a concealed manner. The ends of the bumper rail shall be welded closed.

Contractor shall erect this walk-in in place carefully sealing it to the building floor with non-hardening caulking compound all in accordance with the manufacturer's recommendations. These specifications are based on a W.A. Brown and Sons walk-in.

4.11 ITEM NO. 11 - AIR CURTAIN

Contractor furnished, contractor installed. Only air curtain shall be a wall mounted commercial type unheated unit sized as shown in the Equipment Schedules. Air curtains shall have a one piece molded high density polycarbonate housing in white, gray, gold, beige or dark bronze finish. Color shall be selected by architect. Vertical face of housing shall have air intake louvers which shall be adjustable to reduce the air velocity up to 60 percent with the louvers completely closed. Bottom of housing shall have a wedge shaped discharge nozzle with two adjustable air direction vanes with a 40 degree sweep from front to back. Air curtain shall discharge 1,600 L/s with a maximum velocity of 11.5 M/s.

Air curtain shall have two 0.37 K.W. continuous duty totally enclosed motors with sealed lubricated ball bearings and resilient mounts. Motors shall be connected to direct drive double width and double inlet squirrel cage blower wheels with fan housings. Air curtain shall be wired 120-60-1 and shall have field installed microswitches wired so that when the left door opens, the left motor/fan assembly turns on and when the right door opens, the right motor/fan assembly turns on.. Specifications are based on Mars Model #72CH air curtains.

4.12 ITEM NO. 11a - AIR CURTAINS

Contractor furnished, contractor installed. Air curtains shall be a wall mounted commercial type unheated unit sized as shown in the Equipment Schedules. Wall Mounting shall be above ceiling with the nozzle at bottom of curtain flush with the finished suspended ceiling. Air curtains shall have a one piece molded high density polycarbonate housing in white, gray, gold, beige or dark bronze finish. Color shall be selected by architect. Vertical face of housing shall have air intake louvers which shall be adjustable to reduce the air velocity up to 60 percent with the louvers completely closed. Bottom of housing shall have a wedge shaped discharge nozzle with two adjustable air direction vanes with a 40 degree sweep from front to back. Air curtain shall discharge 1,000 L/s with a maximum velocity of 11.5 M/s.

Each air curtain shall have two 0.37 K.W. continuous duty totally enclosed motors with sealed lubricated ball bearings and resilient mounts. Motors shall be connected to direct drive double width and double inlet squirrel cage blower wheels with fan housings. Air curtains shall be wired 120-60-1 and shall have field installed microswitches wired so that when the left door opens, the left motor/fan assembly turns on and when the right door opens, the right motor/fan assembly turns on. Specifications are based on Mars Model #72C air curtains.

4.13 ITEM NO. 12 - FLOOR TROUGHS w/ GRATES

Contractor furnished, contractor installed. Floor troughs with grates shall be 305 mm wide by 102 mm deep and shall extend the full length of the two curbed areas as shown on plan. Each drain trough shall be constructed of 14 gauge, type 304, 18-8 stainless steel polished to a #4 finish. The drain troughs shall have coved corners and all joints and seams shall be integrally welded, ground and polished. Drain troughs shall have an integral flange around the perimeter and an integral support ledge for the grate at the front and rear. The drain troughs shall be set into the floor with the flange and grate flush with the surrounding floor level. Each drain trough shall have a 80 mm waste connection and shall be complete with an integral stainless steel sump drain with removable stainless steel sediment basket. The full length of each drain trough shall be furnished with 508 mm maximum length sections of removable stainless steel subway type grate. Grate shall have 5 mm by 25 mm bearing bars running from front to rear to reduce splash. Specifications are based on IMC/Teddy Model #FT drain troughs with #SG grates.

4.14 ITEM NO. 12a - CAN RACKS

Government furnished, government installed.

4.15 ITEM NO. 13 - DUNNAGE RACKS

Contractor furnished, contractor installed. Dunnage racks shall each measure overall 914 mm by 600 mm by 305 mm high shall be sized as shown in Equipment Schedules. Each rack shall have a 38 mm square 16 gauge type 304 stainless steel tubular frame with four longitudinal rails and with all joints integrally welded. Each dunnage rack shall have 41 mm diameter stainless steel legs with 38 mm adjustable bullet feet. Specifications are based on John Boos & Co. Model #JB dunnage racks.

4.16 ITEM NO. 14 - SINK, VEGETABLE PREP

Contractor furnished, contractor installed. Work table shall be custom fabricated in the size, shape and arrangement shown in the Equipment Schedules, Plans,andon Details. All free edges of top shall be terminated in a 76 mm high by 38 mm diameter rolled rim. The rear edge of top abutting the wall shall be formed up into a 305 mm high by 64 mm thick backsplash. Front edge of back splash shall be mitered as indicated on drawings.

Welded integrally into the top at the right end shall be a sink insert measuring inside approximately 460 mm by 660 mm by 305 mm deep. Also welded into the top shall be two sink inserts measuring inside approximately 610 mm by 660 mm by 305 mm deep. Each sink shall be fitted with a twist handle drain with overflow. A 14 gauge stainless steel tab shall be integrally welded to the bottom of each sink to support the drain handle. Mounted to back splash and centered behind each sink shall be a faucet with goose neck spout as specified in Section 2.6.1.2.

Integrally welded into the top shall be a disposer bowl specified under Item #15.

Top shall be mounted to an open tube base. Base below the left drain board shall have a full length stainless steel undershelf. The remainder of the base shall be open to the floor with no rail bracing on the working side. Legs not connected to an undershelf or to rails in two directions shall have stainless steel flanged feet secured and sealed to the floor. Work table shall otherwise be constructed in accordance with Section 2 of these

specifications.

4.17 ITEM NO. 15 - WASTE PULPING DISPOSERS

Contractor furnished, contractor installed. Waste pulping disposers shall be by the same manufacturer as the other components of the waste system - the waste pulpers, Item #24 and the extractor, Item #105. Each disposer shall have a capacity of 182 kg of food waste per hour. Each disposer shall have a 254 mm diameter cast stainless steel impeller, three jam resistant hardened stainless steel swivel cutting blocks with tungsten carbide inserts, stainless steel undercutter blade, six ripper/shredder bars with hard face beaded edge, cast iron grind chamber with directional feed ridges, cast iron exit chamber with water injection inlet and cast alloy grind ring with dual stage grinding action. Each disposer shall have a 3.7 K.W. fan cooled motor with ball bearing construction. Disposers shall have screw type adjustable steel legs. Each disposer shall be rubber mounted to a 457 mm diameter stainless steel bowl which shall be integrally welded into the top of the vegetable prep sink, Item #14 and the pot and pan sink, Item #51 in the locations shown on the drawing.

Each waste pulping disposer shall be furnished with a 3.7 K.W. slurry pump. Disposers shall be furnished with a valve package consisting of all valves required for proper operation (fresh water, bowl flush and drain lines).

Each disposer shall include a UL approved stainless steel NEMA 4 electrical control panel mounted to the wall as shown on plan. Control panels shall include all necessary electrical components prewired to a terminal strip, water level control and push button station. Disposers shall be wired 208-60-3 phase and shall have a total load of 30 amps. Specifications are based on Somat Model #D-5 disposers.

4.18 ITEM NO. 16 - REFRIGERATOR, ROLL-THRU

Contractor furnished, contractor installed. Thaw refrigerator shall be a one-section roll-thru unit with full height solid doors hinged as shown on drawing. Refrigerator shall be sized as shown in the Equipment Schedules. Each door shall have a clear opening of 700 mm by 1730 mm. The refrigerator shall have a stainless steel interior and exterior with a #4 finish. Refrigerator shall also be furnished with a stainless steel rear panel extending the full width and height. The front frame shall be extruded thermal plastic providing a thermal break between the interior and exterior of the cabinet eliminating the need for anti-condensate heaters. No heater wires are acceptable. The interior liner shall be crimped construction with 9.5 mm radius bends for easy cleaning. The refrigerator shall have 50 mm minimum polyurethane foam insulation poured, expanded, and bonded in place completely filling all cavities between the inner and outer surfaces of cabinet and doors. The door handles shall be heavy duty cast aluminum bumper type positioned horizontally with cylinder lock. Door shall be furnished with single or double padlock posts and plates as required. Door hinges mechanisms shall be spring loaded cam lift design concealed within the door. Hinges shall be furnished with stops and shall be mounted to reveal full door opening when door is opened past 90 degrees. All doors must be field rehingeable without drilling or defacing the cabinet. Doors shall have interior door panels made of one piece ABS thermoplastic. The vinyl door gaskets shall be easily replaceable without the use of tools. The refrigerator shall have an exterior digital thermometer. The interior light shall have a shatterproof cover and shall be controlled by a door actuated switch. Roll-in rack shall be 659 mm wide by 736 mm deep by 1651 mm high, with wheels inboard of frame.

Refrigerator shall have a 25 mm thick insulated floor with 0.8 mm stainless steel finish. Each door shall have a stainless steel ramp which shall be sealed to the floor. Provide stainless steel roll-in rack, maximum rack size with wheels inboard of frame to be 686mm (27 inches) wide by 737mm (29 inches) deep by 1600mm (65 inches) high.

Refrigerator shall be self contained with a top mounted compressor wired 120-60-1 phase and complete with an electrical cord and plug. Refrigerator shall have a high starting torque 0.25 K.W. compressor rated at 2220 BTU at 32 degrees C ambient temperature. The refrigeration system shall be complete with condensing fan and fan motor, removable insulated coil housing, and temperature control. The R1340 refrigerant shall be metered through a capillary tube. No expansion valves shall be accepted. The evaporator shall be balanced with the compressor rating and shall maintain 2 degrees C cabinet temperature. Cabinet air shall be distributed by a multi-louvered duct from the evaporator into the cabinet. Defrosting shall be automatic. The condensate water shall be automatically evaporated from the top fob the cabinet. No energy consuming heaters or electrically operated devices are acceptable. No plumbing connections shall be required.

The refrigerator shall be furnished with a one-year refrigeration service policy on a local level. Specifications are based on a Traulsen Model RRI 1-32LPUT roll-in refrigerator with safety thaw option and roll-in rack.

4.19 ITEM NO. 17 - TABLES

Government furnished, government installed.

4.20 ITEM NO. 18 - TABLE, /EQUIPMENT STAND

Government furnished, government installed.

4.21 ITEM NO. 19 - TABLES, /EQUIPMENT STANDS, MOBILE

Government furnished, government installed.

4.22 ITEM NO. 20 - STORAGE SHELVING SYSTEM

Contractor furnished, contractor installed. Storage shelving system shall include shelving on both sides of the dry storage room. The side of the room on the wall interior shall have a fixed end shelving unit (F.S.U.) at each end and mobile shelving units (M.S.U.) between, guided by overhead tracks. The side of the room on the exterior wall shall have sized shelving units at each end, a fixed shelving section in the center and mobile shelving units between, guided by overhead tracks.

All fixed and mobile shelving units shall have five equally spaced shelves measuring 530 mm by 1829 mm. Shelves shall be constructed of welded type 302 or 304 stainless steel wire. Shelves shall have #9 wire ribs running front to back on 4.8 mm centers, with #6 wire support ribs located on 203 mm centers and corrugated reinforcement on all four sides. Welded into each corner shall be a stainless steel tapered collar shaped and sized to fit the post and inner tapered split sleeve. Vertical support posts shall be stainless steel and shall be 25 mm diameter with rolled circular grooves 25 mm apart along their length. Shelf shall be mounted to post by means of a 2 piece plastic split sleeve snapped around the post at the desired shelf height, with the resultant tapered surface contacting the matching tapered collar in the shelf corner.

Each fixed section of shelving shall have stationary unit kits with the hardware necessary for connecting to the top tracks. Each fixed section shall have four 2184 mm posts which shall be secured and sealed to the floor. Spanning between the fixed shelving units shall be 6063-T6 aluminum extruded overhead track sets. Each mobile section of shelving shall have a mobile unit kit consisting of posts, casters/caster channels, donut bumpers and roller bearing assemblies to fit in the top tracks. Casters shall have a 127 mm diameter polyolefin wheel with offset stainless steel rigid horn and stainless steel prelubricated ball bearings. Shelving units shall be arranged as shown on drawing. Specifications are based on InterMetro Super Erecta shelving and Top-Track high density shelving systems.

4.23 ITEM NO. 21 - TABLES WITH SINK

Contractor furnished, contractor installed. Work tables shall each be the size, shape and arrangement shown in the Equipment Schedule and on detail drawings. The top shall be constructed of 14 gauge stainless steel with all edges formed down 50 mm square. The top shall be depressed 5 mm with a 20 mm wide rim on all sides. Welded integrally into top at left and as shown on drawing shall be a sink insert measuring inside approximately 406 mm by 508 mm by 305 mm deep. Sink shall be fitted with a twist handle drain with overflow. A 14 gauge stainless steel tab shall be integrally welded to the bottom of the sink to support the drain handle. Mounted to top and centered behind sink shall be a deck mounted faucet with goose neck spout. Mounted to the underside of the top on the right side of the table shall be a deluxe drawer assembly with stainless steel front, ball bearing slides and a removable stainless steel insert measuring 508 mm by 508 mm by 127 mm deep. Mounted to the top shall be a utensil rack specified under Item #26. Top shall be mounted to an open tube base with stainless steel legs and an 18 gauge stainless steel full length undershelf. Specifications are based on an Advance Tabco Model #VSS-306 table with Model #TA-11B sink and Model #SS-2020 drawer.

4.24 ITEM NO. 22 - MEAT SLICING MACHINES

Government furnished, government installed.

4.25 ITEM NO. 23 - VEGETABLE PEELING MACHINE

Contractor furnished, contractor installed. Vegetable peeling machine shall have a capacity of 23 kg to 27 kg of potatoes peeled in 1 to 3 minutes. Peeler shall measure 535 mm in diameter by 1500 mm high overall. Peeler shall have a stainless steel cylinder with abrasive permanently bonded on interior surface of peeling hopper. Hopper shall have a gray molded plastic removable cover. Peeler shall have a quick opening removable aluminum hopper door with a positive cam type pressure lock and a cast aluminum discharge chute. The discharge chute shall overhang the rim of the adjacent sink. Bottom of hopper shall have a removable 520 mm diameter fiberglass reinforced plastic abrasive disc with the silicon-carbide abrasive permanently bonded to the disc. Peeler hopper shall have an air gap type water inlet mounted above the unit.

Peeler shall be wired 208-60-1 phase and shall have a 0.75 K.W. capacitor start induction run motor with manual reset overload protection and grease-packed ball bearings. Peeler disc shall be mounted on a stainless steel drive shaft rigidly mounted on grease-packed ball bearings. Motor shall drive the shaft by means of a multi-grip poly V-belt which shall be adjustable from outside the machine. Peeler shall have a synchronous timer

adjustable from 1/2 minute to 4 minutes. The timer shall be located on the working side of the peeler.

Peeler shall be mounted on a disposer stand with stainless steel legs and four bolt-down adjustable leveling feet. Disposer stand shall be complete with a 0.93 K.W. disposer wired 208-60-1 phase. Disposer shall be constructed by the same manufacturer as the peeler. Disposer shall have a long upper housing. Stand shall have a solenoid water control valve and air gap type inlet. Specifications are based on a Hobart Model #6460-T peeler with a Model #FD3-125 disposer.

4.26 ITEM NO. 24 - WASTE PULPERS w/ TROUGH CONNECTIONS

Contractor furnished, contractor installed. Waste pulpers shall be by the same manufacturer as the other components of the waste system - the disposers, Item #15 and the extractor, Item #105. Each pulper shall have a capacity of 410 kg of waste per hour. Each pulper shall have a 762 mm diameter, 1093 mm high polished stainless steel tank with single feed trough connection and hinged lid with limit switch, 13 mm thick stainless steel slurry chamber, 5.6 K.W. totally enclosed fan cooled direct drive motor, internal junk box and cutting mechanism. Cutting mechanism shall consist of a stainless steel 343 mm diameter impeller and stainless steel perforated sizing ring. Each pulper shall be furnished with a 3.7 K.W. slurry pump. Pulpers shall be furnished with a valve package consisting of all valves required for proper operation (fresh water, trough flush and drain line).

Each pulper shall include a UL approved stainless steel NEMA 4 electrical control panel mounted to the wall as shown on plan. Control panels shall include all necessary electrical components prewired to a terminal strip, water level control and push button station. Each pulper shall also be furnished with dual water level control and motor operated valve with controls. Pulpers shall be wired 208-60-3 phase and shall have a total load of 50 amps. Specifications are based on Somat Model #SP-75S UTD pulpers.

4.27 ITEM NO. 25 - VEGETABLE CUTTER

Government furnished, Government installed.

4.28 ITEM NO. 26 - RACKS, UTENSIL

Contractor furnished, contractor installed. Utensil racks shall be mounted on the tables with sinks, Item #21, and shall be constructed by the same manufacturer. Each rack shall be a mid-mount unit installed at the right end of the top as shown on plan. Each rack shall be 1219 mm long and the top shall be at 2134 mm above the floor. Each rack shall consist of two 41 mm diameter stainless steel posts with a pot rack mounted at the top and a utensil rack mounted below. Posts shall be closed at the top and shall extend down through the top and be secured to the undershelf below. Where the posts penetrate the table top, the top shall be die formed up tight around the posts. The pot rack and utensil rack shall be constructed of 50 mm by 5 mm stainless steel bars. The pot rack shall be a 559 mm wide rectangle with radius corners. The utensil rack shall be a straight bar extending from post to post. Each end of the pot racks and utensil racks shall have a stainless steel gusset with set screw so that they are adjustable in height. Pot racks shall be furnished with four plated pot hooks per foot and the utensil racks shall be furnished with two hooks per foot. Specifications are based on Advance Tabco Model #TA288 mid mount

units with Model #SCT-48 pot racks and Model #AUR-48 utensil racks.

4.29 ITEM NO. 27 - RANGE, 4 BURNER

Contractor furnished, contractor installed. Range shall be a heavy duty four-burner natural gas fired range with cabinet base, sized as shown in the Equipment Schedules. Range shall have stainless steel front, sides, front top ledge and a stainless steel backguard. Range shall have four 5.9 K.W. open burners with center pilot. Range shall have a one piece, heavy duty, lift off, cast iron top with two integral bowls and a large capacity removable aluminized drip pan. Base of range shall have a stainless steel hinged door with extruded aluminum handle. Range shall be mounted on one set of 152 mm high stainless steel legs with stainless steel adjustable flanged feet which shall be secured and sealed to the floor. Range shall be furnished with a 20 mm rear gas connection and a gas pressure regulator. Range shall be furnished with all standard equipment and shall otherwise be in accordance with the manufacturer's standard specifications. Specifications are based on a Vulcan Model #24L.

4.30 ITEM NO. 28 - PAN, FRYING AND BRAISING

Contractor furnished, contractor installed. Braising pan shall be a closed base, natural gas heated, manual tilting unit sized as shown in the Equipment Schedule. Tilting braising pan, natural gas heated, closed base. Pan body shall be 14 gauge stainless steel, front hinged for tilting (pouring ease). Shall have coved interior bottom with front typed formed pouring lip flanged 102 mm on both sides for complete no spillage control. A removable pouring lip strainer is standard. Food is directed (poured) into a food receiving pan positioned under the pouring lip, set in the (standard) removable food receiving pan support. Braising pan shall empty when raised to top tilt position. Cooking surface shall be stainless steel bonded to 13 mm thick carbon steel plate for ease of cleaning and heat distribution. Cover shall be one piece stainless steel with full width rear drip lip. Field adjustable cover lift assist shall hold hinged cover in any open position set by operator. Shall be mounted on 152 mm stainless steel legs, 51 mm diameter, with stainless steel adjustable feet, rear flanged for floor anchoring. (Standard) pan tilting control manual (hand crank) with swing-away handle (spring loaded). Thermostatic heat control shall have pan mounted on left with a 60 minute timer. When pan raised, the standard micro switch shall shut off the heat source. The thermostatic heat control is snap-acting 38 degrees C to 232 degrees C. Base shall be enclosed by hinged double pan doors and lift-off panels of box type construction. Shall be exposed exterior stainless steel. Shall be AGA and NSF listed. Shall be fitted with electric ignition and hot/cold spray hose options. Specifications based on Vulcan-Holt Model No. G40C.

Furnished with the braising pan shall be a flexible gas connector assembly. Connector shall have a 20 mm by 1524 mm long hydroformed corrugated stainless steel hose with inline braiding and covered with a yellow plastic cover in accordance with ASME standards. The flexible gas connector shall be ANSI Z21.69 design certified. The flexible hose shall be equipped with two swivel connector fittings, a quick disconnect and a 360 degree rotatable hex nut connector fitting. The flexible connector shall be furnished with a coiled restraining device with installation hardware. The flexible connector, fittings and the restraining device shall be equipped with the manufacturer's standard equipment and shall be in accordance with the manufacturer's standard specifications. Specifications are based on Hose Master Model #SLQSP.

4.31 ITEM NO. 29 - REFRIGERATOR, RAPID THAW, WITH ROLL-IN CABINETS

Contractor furnished, contractor installed. Thaw refrigerator shall be a two section roll-in unit with full height solid doors hinged as shown on drawing. Refrigerator shall be by the same manufacturer as all other roll-ins or reach-ins on the project. Refrigerator shall be sized as shown in the Equipment Schedules. Each door shall have a clear opening of 700 mm by 1651 mm. The refrigerator shall have a stainless steel interior and exterior with a #4 finish. Refrigerator shall also be furnished with a stainless steel rear panel extending the full width and height. The front frame shall be extruded thermal plastic providing a thermal break between the interior and exterior of the cabinet eliminating the need for anti-condensate heaters. No heater wires are acceptable. The interior liner shall be crimped construction with 9.5 mm radius bends for easy cleaning. The refrigerator shall have 50 mm minimum polyurethane foam insulation poured, expanded, and bonded in place completely filling all cavities between the inner and outer surfaces of cabinet and doors. the door handles shall be heavy duty cast aluminum bumper type positioned horizontally with cylinder lock. Doors shall be furnished with single or double padlock posts and plates as required. Door hinge mechanisms shall be spring loaded cam lift design concealed within the door. Hinges shall be furnished with stops and shall be mounted to reveal full door opening when door is opened past 90 degrees. All doors must be field rehingeable without drilling or defacing the cabinet. doors shall have interior door panels made of one piece ABS thermoplastic. The vinyl door gaskets shall be easily replaceable without the use of tools. The refrigerator shall have an exterior digital thermometer. The interior light shall be controlled by a door actuated switch.

Refrigerator shall have a 25 mm thick insulated floor with 22 gauge stainless steel finish. Each door shall have a stainless steel ramp which shall be sealed to the floor.

Refrigerator shall be self contained with a top mounted compressor wired 120-60-1 phase and complete with an electrical cord and plug. Refrigerator shall have a high starting torque 0.37 K.W. compressor rated at 4,560 BTU at 32 degrees C ambient temperature. The refrigeration system shall be complete with condensing fan and fan motor, removable insulated coil housing, and temperature control. The R22 refrigerant shall be metered through a capillary tube. No expansion valves shall be accepted. The evaporator shall be balanced with the compressor rating and shall maintain 2 degrees C cabinet temperature. Cabinet air shall be distributed by a multi-louvered duct from the evaporator into the cabinet. Defrosting shall be automatic. The condensate water shall be automatically evaporated from the top of the cabinet. No energy consuming heaters or electrically operated devices are acceptable. No plumbing connections shall be required.

Refrigerator shall be furnished with a safety thawing system designed to automatically thaw frozen product through use of the refrigeration system in a reversed, heat pump mode. Resistance heaters are not required. The unit shall have two mullion mounted fan assemblies to aid the thawing process. The unit shall automatically revert to a 3 degrees to 5 degrees C holding cabinet after the thawing process is completed.

The refrigerator shall be furnished with a one-year refrigeration service policy on a local level. Specifications are based on a Victory Model TRIS-2D-S7 roll-in refrigerator with safety thaw option.

Furnished with the thaw refrigerator shall be two roll-in universal angle

racks sized to fit the refrigerator. Each rack shall measure 670 mm by 685 mm by 1640 mm high and shall be furnished with 12 pairs of universal angle slides. Top and bottom slides shall be welded to the rack frame. The remaining sets of slides shall be adjustable on 38 mm centers. Each set of slides shall hold (1) 460 mm by 660 mm pan or (2) 305 mm x 510 mm pans and all pans shall be supported on the bottom of the pan. The rack frame shall be constructed of all welded aluminum channels and a solid one piece base plate. Racks shall be mounted on swivel casters with 125 mm diameter by 30 mm wide neoprene tires. Each rack shall have a foot actuated floor lock. Specifications are based on Cres-Core Model #207-UA-12C racks.

4.32 ITEM NO. 30 - FLOOR TROUGHS w/ GRATES

Contractor furnished, contractor installed. Floor troughs with grates shall be sized as shown in the Equipment Schedule and Details and shall be located as shown on plan. Floor troughs and grates shall otherwise be the same as those specified for Item #12.

4.33 ITEM NO. 31 - FROZEN FOOD CABINET (PASS-THRU)

Contractor furnished, contractor installed. Pass-thru freezer shall be a two section unit with 54.2 cubic meters capacity. Freezer shall be fitted with half height doors, on both sides of cabinet, hinged as shown on plan. The freezer shall be sized as shown in the Equipment Schedules. The freezer shall have a stainless steel interior and exterior. The front frame shall be extruded thermal plastic providing a thermal break between the interior and exterior of the cabinet with anti-condensate heaters. The interior liner shall be crimped construction with 10 mm radius bends for easy cleaning. The freezer shall have non CFC polyurethane foam insulation poured, expanded, and bonded in place completely filling all cavities between the inner and outer surfaces of cabinet and doors. The doors shall have heavy duty, cast aluminum, bumper type door handles positioned horizontally with cylinder lock and keys. Chrome plated door hinge mechanisms shall be spring loaded, cam lift design furnished with stops and amounted to reveal full door openings when door panels made of one piece ABS thermoplastic. The interior light shall be controlled by a door actuated switch. The vinyl door gaskets shall be easily replaceable without the use of tools. The freezer shall have an exterior digital thermometer. The freezer shall have 152 mm high stainless steel legs with stainless steel adjustable feet.

The freezer shall be self contained with a top mounted compressor wired 120-60-1 phase with 3048 mm cord and plug. the refrigeration system shall be complete with condensing fan and fan motor, removable insulated coil housing, and temperature control. Defrosting shall be automatic with a defrost clock for time actuation and termination. The defrost heaters shall have safety overload protector. The refrigerant shall be metered through a capillary tube. No expansion valves shall be accepted. The refrigerator shall have a high starting torque 5.6 K.W. compressor rated at 3,380 BTU at 32 degrees C ambient temperature. The refrigeration system shall use R404A refrigerant. The evaporator shall be oversized to operate at -23 degrees C temperature. The condenser shall have a heavy duty one piece all aluminum skived fin design to match the motor-compressor rating. No plumbing connections shall be required. The condensate water shall be automatically evaporated from the top of the cabinet. No energy consuming heaters or electrically operated devices are acceptable. The freezer shall be furnished with a one year refrigeration service policy on a local level.

Freezer shall be equipped with ten only stainless steel wire shelves.

Shelves shall be adjustable on 25 mm centers. Specifications are based on a Traulsen RLT 2-32 WPUT.

4.34 ITEM NO. 32 - OVENS

Contractor furnished, contractor installed. Convection ovens shall each be a double deck natural gas fired baking and roasting oven sized as shown in the Equipment Schedules including a 178 mm high stainless steel leg stand with adjustable stainless steel feet. Exterior front, top, and each end shall be stainless steel. Interior of each deck shall be porcelain enameled steel. Oven interiors shall measure 737 mm wide by 695 mm deep by 508 mm high. Each oven shall be insulated with high temperature glass fiber sheets with 50 mm thickness on the doors, back and sides and 102 mm thickness on the top. A single handle mounted on left hand door shall operate both doors simultaneously to the side with a 180 degree total opening angle. Doors shall have multipane windows. The interior of each oven shall be fitted with removable chrome plated rack supports with a capacity of eleven racks. Each oven deck shall be furnished with five only chrome plated wire racks.

Each oven compartment shall be heated by two burners at 17.6 K.W. total at the high load control setting and 4.4 K.W. at the low load control setting. Electric ignition shall light a standing pilot when the power switch is turned to the ON position. All gas shall be shut off when the power switch is turned to the OFF position. Each oven shall be furnished with a manual gas shut-off valve and gas pressure regulator. Ovens shall preheat to 204 degrees C within 15 minutes. Each oven shall have a 0.25 K.W. two speed thermally protected fan motor, wired 120-60-1 phase and rated at 5.6 amps. Each oven shall have two 2134 mm long electrical cords and plugs.

Each oven shall have interior oven lights and auxiliary fan switch for rapid cool down with the doors open. Fan motor shall shut off when oven doors are opened. Oven controls shall be side mounted with a thermostat adjustable from 93 degrees to 260 degrees C. Timers shall be electrical 5 hour type with continuous sounding buzzer. Each lower oven compartment shall be a "Roast and Hold" deck with two speed fan, 12 hour timer, preset holding thermostat and "Roast and Hold" selector switch. Oven shall be AGA design certified, NSF listed and CGA approved. Specifications are based on Vulcan Model SG44D double deck ovens.

4.35 ITEM NO. 33 - OPENERS, CAN

Government furnished, government installed.

4.36 ITEM NO. 34 - MIXING MACHINE

Contractor furnished, contractor installed. Mixer shall be a 57 liter capacity floor type mixer by the same manufacturer as all other mixers on the project. Mixer shall have a 1.5 K.W. motor built by the mixer manufacturer and designed especially for this mixer. The motor shall have grease packed ball bearings and a ventilated splash proof enclosure. Mixer shall be wired 208-60-3 phase and shall be U.L. listed. The mixer shall have a magnetic contactor with automatic resetting bimetallic thermal overload protection internally mounted. Mixer shall be fitted with a start-stop button protected by rubber caps and a 15 minute motor driven timer. Mixer shall have a reduced voltage pilot circuit transformer for the controls. Mixer shall have a direct drive transmission with constant mesh helical gears of hardened alloy steel. A hardened steel worm and alloy bronze worm wheel shall transmit power from the motor to

transmission. Circulating oil lubrication shall be furnished to all hears. Mixer shall have a glass visual type oil level gauge. No belts, pulleys, or chains shall be acceptable. No periodical internal lubrication shall be required. Mixer shall have four (4) fixed agitator speeds, with speed #1 at 70 RPM, speed #2 at 124 RPM, speed #3 at 206 RPM and speed #4 at 362 RPM. Mixer shall be equipped with a #12 tapered attachment hub mounted on the front. Mixer shall be supplied in a metallic gray polyurethane enamel finish. The bowl lift on the mixer shall be hand cranking, self locking and shall be adjustable to assure proper agitator and bowl clearance.

Supplied with this mixer shall be:
One (1) only 60 quart stainless steel bowl
One (1) only 60 quart flat beater
One (1) only 60 quart stainless steel wire whip
One (1) only 60 quart dough hook
One (1) only 60 quart bowl scraper
One (1) only 60 quart bowl truck
One (1) vegetable cutting/slicing unit

Mixer shall be supplied with a one (1) year warranty on parts, labor and mileage against manufacturer's defects. Mixer shall also be listed by National Sanitation Foundation and shall be certified by the Baking Industry Sanitation Standards Committee. Specifications are based on a Hobart Model #H600DT.

4.37 ITEM NO. 35 - MIXING MACHINE

Government furnished, government installed.

4.38 ITEM NO. 36 - KETTLE

Contractor furnished, contractor installed. Kettle shall be a natural gas fired, fully steam jacketed, stationary tri-leg kettle with a capacity of 152 liters. Kettle shall be sized as shown in the Equipment Schedules. The interior bottom of the kettle shall be dish shaped and shall slope toward and front to a 76 mm diameter tapered plug type draw-off valve. Kettle shall have stainless steel interior and exterior and shall be mounted on three 50 mm diameter stainless steel legs with adjustable bullet feet. Kettle shall have a stainless steel dome shaped cover hinged on the left, with drop type handle and insulated knob. The stainless steel control panel shall be located on the right. Unit shall be equipped with a hot and cold water faucet with swing spout and bracket mounted on the kettle.

Natural gas burners shall have an input of 30.8 K.W. Furnished with the kettle shall be a 103 kPa relief valve, vacuum relief valve, air relief valve, thermostat, pressure gauge, low water cut off, pressure limit switch and a 120 volt combination gas control valve that shuts off main burner gas at time of any pilot outage. Kettle shall be factory charged with chemically pure water, rust inhibitor and antifreeze set to -34 degrees C. Kettle shall be NSF listed, AGA design certified and constructed per ASME code. Specifications are based on a Vulcan Model #GL40.

4.39 ITEM NO. 37 - COUNTERS

Contractor furnished, contractor installed. Counters shall be custom fabricated in the size, shape and arrangement as shown in Equipment Schedules, Plans, and Details. The top shall be constructed of 14 gauge stainless steel with a 102 mm high by 25 mm wide backsplash against the

building wall and a 51 mm square turn down edge on all other sides. The front edge of counters shall butt tightly against the building wall and the tray slide, Item #37a. Joint shall be neatly sealed the full length of the counter. Openings shall be provided in the top for hot food wells specified under Item #66 and in the locations shown on plan. Mounted to the top shall be a sneeze guard specified under Item #66a.

Base of each counter shall be constructed of 18 gauge stainless steel and shall be enclosed on all sides except the working side. The working side of the counters shall have a full length 178 mm deep apron just below the top. Recessed in the apron shall be a light switch for the sneeze guard, Item #66a. The interior of the base shall have a full length 18 gauge stainless steel undershelf measuring 610 mm front to back. Sides of undershelf shall be formed up 38 mm square and shall be tack welded and sealed to the body. The rear edge of undershelf shall be formed up 152 mm high and tightly hemmed. Counter shall be mounted on 152 mm high, 41 mm diameter stainless steel legs with casters. Counters shall otherwise be constructed in accordance with Section 2 of the specifications.

4.40 ITEM NO. 37a - TRAY SLIDE

Tray slide shall be custom fabricated in the size, "U" shape and arrangement as shown in Equipment Schedules, Plans, and Detailson plan. Tray slide shall accommodate 356 mm by 457 mm trays. The tray slide shall be constructed of 2.0 mm stainless steel and shall be formed in the configuration shown on plans. The front vertical edge of the tray slide shall be highlighted to a #7 finish. The rear edge of the tray slide shall be highlighted to a #7 finish. The rear edge of the tray slide shall be formed up under the turned down edge of the top. The joint between the top and tray slide shall be tight and shall be neatly sealed and full length. The corners and ends of the tray slide shall be mitered as shown on the plans and details. The ends of the tray slides shall be welded closed. The tray slide shall be mounted to the partial height wall with 102 mm high 2.0 mm stainless steel brackets spaced 914 mm o.c. Brackets shall be secured to the tray slide and counter base. The rear side of the partial height wall shall be covered with 1.3 mm stainless steel panels and shall extend down to the top of the finished base material. Panels shall be secured with mastic in a concealed manner. Tray slides shall otherwise be constructed in accordance with Section 2 of the specifications.

4.41 ITEM NO. 38 - KETTLES w/ STAND

Contractor furnished, contractor installed. 19 liter tilting kettles shall be mounted on a stainless steel modular base with a natural gas fired steam generator. Kettles and stand shall be sized as shown in the Equipment Schedules. Kettles shall be all welded type 304 stainless steel with a double wall steam jacket around the lower 2/3 of the kettle. Kettles shall tilt forward 90 degrees to completely empty and then return to a vertical position.

Cabinet base shall have stainless steel top, sides and front doors. Rear of base shall be aluminized steel. Doors shall be double pan construction with recessed pull handles. Base shall be mounted on 152 mm stainless steel legs with adjustable feet. The rear feet shall be flanged for anchoring to the floor. Base shall have a single swing spout faucet to fill both kettles. Top of base shall have recessed drain pans in front of the two kettles.

The cabinet base shall have a steam generator with a gas input of 49.8 K.W.

Steam generator controls shall be wired 120-60-1 phase. Steam lines between generator and kettles and all steam line accessories shall be completely pre-piped on the interior of the base. The top of the stand shall have a steam control valve for each of the kettles. Specifications are based on Vulcan Model #2T3036G.

4.42 ITEM NO. 39 - EXHAUST HOOD

Contractor furnished, contractor installed. Exhaust hood shall be a high velocity water wash ventilator constructed in compliance with NFPA #96, BOCA, ICBO (uniform Mechanical Code), SBC and ACGIH (American Conference of Governmental Industrial Hygienists). The exhaust hood shall be U.L. listed and NSF approved. Exhaust hood shall be constructed in the size, shape, and arrangement shown on drawing and equipment schedule, measuring overall approximately 7000 mm long by 1350 mm wide by 900 mm high and verified with mechanical design. Exhaust hood shall be complete with high velocity grease extractor, plenum fire-dampers, duct collars, make-up air plenum, hanger brackets, auto wash control panel, piping, and nozzles. All sections of hood shall be pre-wired and pre-plumbed to individual connection points.

The entire exhaust hood shall be constructed of 18 gauge type #304 stainless steel with a #4 finish. All external seams and joints shall be welded liquid tight with all exposed welds ground smooth and polished back to original finish. Exhaust hood shall be furnished with all necessary hanger rods and shall be suspended from building structure above. Hood shall be supplied with stainless steel closure channels on front and both ends as required to close the gap between the top of the exhaust hood and the finished ceiling.

Hood shall be fitted with a full length high velocity low volume grease extractor chamber with four pass design. Horizontal baffles shall extract and retain grease out of air stream prior to wash down. Full length baffle shall be hinged for easy access to piping, nozzles, and entire extraction chamber. Exhaust duct collars shall be sized as shown on the mechanical drawings.

Provide stainless steel U.L. listed spring loaded electrically activated manually resettable fire dampers controlled by electric thermostats with 182 degrees C fusible link back up. Both dampers and thermostats shall be mounted at duct collars and easily accessible. Should power fail, damper shall remain open to allow continued cooling and shall close only in the event of fire.

The integral tempered make-up air supply system shall consist of duct collars, plenums, air diffuser baffles and discharge registers. This supply air chamber shall have perforated panels on external face of hood for low velocity discharge of air into kitchen. Perforated panels shall be hinged. Make-up air duct collars shall be sized as shown on the mechanical drawings.

Exhaust hood shall have a 914 mm by 914 mm by 178 mm deep wash control panel with auto wash system, which when activated will automatically wash down entire extraction chamber and plenum with 60 degrees C water and detergent. Water spray system shall also provide internal plenum and duct collar protection when activated by thermostat or manual pull fire switch. Wash control panel shall have flange on all sides and shall be flush mounted in the opening in the wall. All conduit and piping shall be concealed in the wall.

Each section of hood shall be fitted with twenty (20) 610 by 248 by 152mm, U.L listed pre-wired recessed fluorescent light fixtures extending the full length of each hood section. All light fixtures shall be wired in a concealed manner to a junction box on top of the hood for connection to the light switch mounted in the wash control panel.

The hood shall otherwise be in accordance with the manufacturer's standard specifications. Specifications are based on an Avtec Model #AWWP exhaust hood.

4.43 ITEM NO. 40 - FLOOR TROUGH WITH GRATE

Contractor furnished, contractor installed. Floor trough with grate shall be sized as shown in the Equipment Schedules and shall be located as shown on plan. Floor trough and grate shall otherwise be the same as those specified for Item #12.

4.44 ITEM NO. 41 - FIRE SUPPRESSION SYSTEMS

Contractor furnished, contractor installed. The exhaust hoods, Item #39, shall be furnished with a liquid agent fire suppression system which shall be installed in a recessed stainless steel cabinet mounted in the wall near the ceiling as shown on plan. No conduit or piping shall be exposed to view. The fire suppression system shall be a U.L. listed liquid agent, cartridge operated, regulated pressure system with a fixed nozzle agent distribution network. The system shall be capable of automatic detection and actuation with local or remote manual actuation. Fire suppression system shall be provided with a remote manual pull station recessed in the wall below the fire suppression system cabinet. The fire suppression system shall be factory piped and complete with all necessary surface protection nozzles as required by Code. The system shall be a multiple system with capacity properly sized for the nozzles required. The extinguishing agent shall be a potassium carbonate, potassium acetate-based formulation designed for flame knock down and securement of grease related fires. The regulated release mechanism shall be a spring loaded mechanical/pneumatic type with a nitrogen cartridge for providing the expellant gas supply to the liquid agent tanks. The regulated release mechanism shall contain a factory installed regulator set at 690 kPa. The mechanism shall have a visual indicator of the cocked or fired position without having to open the enclosure. The fire suppression system shall have an automatic fusible link detection system. The fire suppression system shall also have a microswitch to allow the shut-off of all gas and electricity for the items below the exhaust hood. Shut-off devices shall be furnished and installed under other sections of the specifications. All exposed piping for the fire suppression system shall be chrome plated or chrome sleeved. The fire suppression system shall be installed in accordance with the Underwriter's Laboratories Listing, NFPA 96 and NFPA 17 and shall conform to all local authorities having jurisdiction over this fire suppression system. Upon completion of the installation of the fire suppression system, a qualified fire suppression installer shall inspect the system and certify in writing that this system meets all applicable Codes. Specifications are based on an Ansul Model #R-102 system.

4.45 ITEM NO. 42 - 3 FRYER UNITS & FILTER STATION

Contractor furnished, contractor installed. Fryer units shall consist of three fryers with a built-in filter system on the left end as shown in plan and sized in Equipment Schedules. Each fryer shall have a capacity of 30.9

kg of oil and shall have the capability of cooking up to 65.5 kg of frozen french fries or 68.2 kg of chicken per hour. Each fryer shall have a stainless steel fryer vessel, heat transfer tubes, splash deck, splash back and flue deflector installed in a cabinet base. Fry vessel shall have seamless corners and shall be drawn from 18 gauge stainless steel with four 18 gauge stainless steel heat transfer tubes. Fryer vessel and heat transfer tubes shall be polished to a #7 mirror finish. Splash deck shall be constructed of 18 gauge stainless steel and shall slope toward the fry vessel. It shall have 102 mm high vertical sides to prevent boil-over. Cabinet shall be constructed of 18 gauge stainless steel on sides and rear with 22 gauge stainless steel door, 22 gauge stainless steel control panel and 18 gauge stainless steel canopy.

Each fryer shall be natural gas fired with an input of 48.4 K.W. Each fryer shall include a melt cycle for solid shortening and electric spark ignition. Fryers shall have a thermostat with stainless steel bulb, accurate to 1 degree C and adjustable from 120 degrees to 190 degrees C. Each fryer shall have a manually resettable high limit control with stainless steel bulb and a safety test switch on the control panel. Fryers shall have a mercury vapor type 100 percent safety shut-off with dual combination control gas valve. Fryers shall be wired 120-60-1 phase and shall be furnished with an electrical cord and plug.

Each fryer shall be furnished with one pair chrome plated four mesh baskets, chrome plated grid screen over heat transfer tubes, drain clean out rod and sample of cleaning powders.

Fryers shall be connected to a built-in central filter system with a capacity of 35.5 kg of oil. Filter shall be a closed system requiring no direct contact with the shortening and shall filter each fryer in six minutes. Filter shall have a 0.25 K.W. pump with a capacity of 0.32 L/s. Filter shall have a a stainless steel cabinet and door to match the fryers and the top of filter shall have a recessed perforated stainless steel bagging station. Filter shall have a safety switch to provide 100 percent fryer shut-off when the drain valve is opened. Each fryer shall also have a return valve with a closed pipe return system. Return valve shall be located above the drain line and must be opened before the drain valve can be opened. Base of filter shall have a stainless steel filter drawer and crumb basket, a screen, hold down ring and spring loaded "T" arms for the filter paper and filter media. Filter system shall be furnished with one carton of 60 individual packages of filtering compound and one package of 60 paper filters.

Mounted to the backsplash over the filter and bagging station shall be a food warmer. Warmer shall have two 250 watt infrared bulbs, heavy duty chrome shades, bulb protectors, ceramic sockets and an 1829 mm long electrical cord and plug. Warmer shall be adjustable in height from 584 mm to 711 mm.

Fryers and filter shall be secured together in one battery with a one piece continuous front ledge and connecting strips between each unit. Fryers and filter shall be mounted on one set of casters with polyurethane tired wheels and brakes on the front casters. The gas connections on the fryers shall be manifold to one connection point. Specifications are based on three (3) Keating Model 20TSGAS, one (1) Model #WOSA 18CF filter and Model #2 LCF food warmer.

Furnished with the fryers shall be one flexible gas connector assembly. Connector shall have a 25 mm by 1220 mm long hydroformed corrugated

stainless steel hose with inline braiding and covered with a yellow plastic cover in accordance with ASME standards. The flexible gas connector shall be ANSI Z21.69 design certified. The flexible hose shall be equipped with two swivel connector fittings, a quick disconnect and a 360 degree rotatable hex nut connector fitting. The flexible connector shall be furnished with a coiled restraining device with installation hardware. The flexible connector, fittings and the restraining device shall be equipped with the manufacturer's standard equipment and shall be in accordance with the manufacturer's standard specifications. Specifications are based on Hose Master Model #SLQSP.

4.46 ITEM NO. 43 NOT USED

4.47 ITEM NO. 44 - FRYER UNIT STATION AND FILTER UNIT

Contractor furnished, contractor installed. Fryer unit station shall consist of one fryer with a built-in filter system adjacent as shown in plan and sized in Equipment Schedules. Fryer shall have a capacity of 30.9 kg of oil and shall have the capability of cooking up to 65.5 kg of frozen french fries or 68.2 kg of chicken per hour. Fryer shall have a stainless steel fryer vessel, heat transfer tubes, splash deck, splash back and flue deflector installed in a cabinet base. Fryer vessel shall have seamless corners and shall be drawn from 18 gauge stainless steel with four 18 gauge stainless steel heat transfer tubes. Fryer vessel and heat transfer tubes shall be polished to a #7 mirror finish. Splash deck shall be constructed of 18 gauge stainless steel and shall slope toward the fry vessel. It shall have 102 mm high vertical sides to prevent boil-over. Cabinet shall be constructed of 18 gauge stainless steel on sides and rear with 22 gauge stainless steel door, 22 gauge stainless steel control panel and 18 gauge stainless steel canopy.

Fryer shall be natural gas fired with an input of 48.4 K.W. Fryer shall include a melt cycle for solid shortening and electric spark ignition. Fryers shall have a thermostat with stainless steel bulb, accurate to 1 degree C and adjustable from 120 degrees to 190 degrees C. Each fryer shall have a manually resettable high limit control with stainless steel bulb and a safety test switch on the control panel. Fryers shall have a mercury vapor type 100 percent safety shut-off with dual combination control gas valve. Fryers shall be wired 120-60-1 phase and shall be furnished with an electrical cord and plug.

Each fryer shall be furnished with one pair chrome plated four mesh baskets, chrome plated grid screen over heat transfer tubes, drain clean out rod and sample of cleaning powders.

Fryers shall be connected to a built-in central filter system with a capacity of 35.5 kg of oil. Filter shall be a closed system requiring no direct contact with the shortening and shall filter each fryer in six minutes. Filter shall have a 0.25 K.W. pump with a capacity of 0.32 L/s. Filter shall have a a stainless steel cabinet and door to match the fryers and the top of filter shall have a recessed perforated stainless steel bagging station. Filter shall have a safety switch to provide 100 percent fryer shut-off when the drain valve is opened. Each fryer shall also have a return valve with a closed pipe return system. Return valve shall be located above the drain line and must be opened before the drain valve can be opened. Base of filter shall have a stainless steel filter drawer and crumb basket, a screen, hold down ring and spring loaded "T" arms for the filter paper and filter media. Filter system shall be furnished with one carton of 60 individual packages of filtering compound and one package of

60 paper filters.

Mounted to the backsplash over the filter and bagging station shall be a food warmer. Warmer shall have two 250 watt infrared bulbs, heavy duty chrome shades, bulb protectors, ceramic sockets and an 1829 mm long electrical cord and plug. Warmer shall be adjustable in height from 584 mm to 711 mm.

Fryer and filter shall be secured together in one battery with a one piece continuous front ledge and connecting strips between each unit. Fryers and filter shall be mounted on one set of casters with polyurethane tired wheels and brakes on the front casters. The gas connections on the two fryers shall be manifold to one connection point. Specifications are based on a Keating Model 20TSGAS, a Model #WOSA 18CF filter and Model #2 LCF food warmer.

Furnished with the fryer shall be one flexible gas connector assembly. Connector shall have a 25 mm by 1220 mm long hydroformed corrugated stainless steel hose with inline braiding and covered with a yellow plastic cover in accordance with ASME standards. The flexible gas connector shall be ANSI Z21.69 design certified. The flexible hose shall be equipped with two swivel connector fittings, a quick disconnect and a 360 degree rotatable hex nut connector fitting. The flexible connector shall be furnished with a coiled restraining device with installation hardware. The flexible connector, fittings and the restraining device shall be equipped with the manufacturer's standard equipment and shall be in accordance with the manufacturer's standard specifications. Specifications are based on Hose Master Model #SLQSP.

4.48 ITEM NO. 45 - WATER METERS

Contractor furnished, contractor installed. Water meters shall be sized as shown in Equipment Schedules. Water meters shall have an automatic hot and cold water manual mixing valve with a capacity of 90.7 kg/minute. Water meters shall be accurate to plus or minus 1 percent. Water meters shall be furnished with a wall mounting bracket and shall be installed in locations shown on plan. Specifications are based on Stoppil Model #AMM.

4.49 ITEM NO. 46 - TABLE, BAKERS

Government furnished, government installed.

4.50 ITEM NO. 47 - COOKER, STEAMER

Contractor furnished, contractor installed. Steamer shall be a two compartment unit mounted on a cabinet base with a natural gas fired steam generator. Steamer shall be sized as shown in Equipment Schedules. Steamer shall have automatic compartment controls to allow pressureless compartment operation during the preheat and defrost cycles, and when 82 degrees C is reached, the automatic operation switches to 35 to 103 kPa pressurized limited free venting cooling. Cooking shall be load compensated and automatically timed. When the compartment cooking cycle ends, one minute shall be allowed for exhaust drainage before the end of cycle buzzer sounds. Steam compartment controls and generator controls shall be wired 120-60-1 phase.

Steamer compartments shall be 670 mm wide by 330 mm high by 543 mm deep and shall have stainless steel interior and exterior. Each compartment shall have removable pan slides with a capacity of (6) 305 mm by 508 mm by 64 mm

pans or (6) 457 mm by 660 mm sheet pans. Compartment doors shall have a stainless steel spring loaded latch with paddle type release and a cross bar handle door screw.

Steamer compartments shall be mounted on a cabinet base with stainless steel panels on the sides and rear and hinged stainless steel doors on the front. Base shall be mounted on 152 mm high, 50 mm diameter stainless steel legs with adjustable feet. Rear feet shall be flanged for anchoring to the floor. Mounted in the base shall be a steam generator with a gas input of 26.4 K.W. Steam generator shall have automatic blow down with cold water condenser. Steamer shall be NSF listed, AGA design certified and constructed per ASME code. Specifications are based on Groen Model #HY-6G.

4.51 ITEM NO. 48 - HAND SINKS w/ SOAP/TOWEL DISP.

Contractor furnished, contractor installed. Hand sinks shall have one piece deep drawn heavy gauge stainless steel construction with all vertical and horizontal corners coved. Hand sinks shall be sized as shown in Equipment Schedules with a bowl size of 356 mm by 254 mm by 127 mm deep. Hand sinks shall have an integral 197 mm high backsplash with a 50 mm turn back on a 45 degree angle. The hand sinks shall be furnished with a stainless steel skirt on the front and both sides. Hand sinks shall be installed with the front rim at 864 mm above the finished floor.

Each hand sink shall be furnished with a stainless steel paper towel dispenser designed to dispense "C" fold paper towels. Paper towel dispenser shall be mounted to the sink backsplash and shall measure 438 mm long by 102 mm wide by 498 mm high. Mounted to the front of the towel dispenser at the left end shall be a soap dispenser.

Hand sinks shall have two openings in the backsplash at 102 mm on center. Mounted to the backsplash shall be a standard faucet with wrist action handles and a swivel goose neck spout with aerator. Each sink shall be equipped with a 40 mm stainless steel basket drain, a lever operated rain with built-in overflow with plastic overflow tube and spring clips. Specifications are based on Advance Tabco Model #75-PS-85 sinks.

4.52 ITEM NO. 49 - INGREDIENT BINS, MOBILE

Government furnished, government installed.

4.53 ITEM NO. 50 - POT SANITIZER

Contractor furnished, contractor installed. Pot sanitizer shall be an automatic door type utensil washer with timed wash and rinse cycle and capacity of (25) 610 mm by 711 mm racks per hour. Utensil washer shall be sized as shown in the Equipment Schedules. Hood and tank shall be all welded 14 gauge type 304 stainless steel. Tank shall have a flat bottom with stainless steel frame and legs and shall have a capacity of 91 liters. All internal castings shall be non-corrosive Ni 412 non-ferrous nickel alloy with stainless steel track construction, stainless steel scrap screens welded with no sharp edges, nylon suction strainer, brackets and supports and stainless steel power jet spray arms.

Utensil washer shall have a front inspection/cleanout door and two simultaneously opening doors. Operating doors shall be cantilevered with spring connected directly to door lever. Doors shall be die formed and shall ride in interior mounted all welded channels. Top of utensil washer

shall have a 152 mm by 152 mm center vent.

Utensil washer shall have a NEMA type 12 water-tight stainless steel control box with solid state timing, automatic tank fill, automatic positive lower water cutoff, door interlock, by-pass manual selector switch, and 24 volt control circuit. Wash cycle shall be adjustable from 0 to 5 minutes and rinse cycle shall be adjustable from 0 to 30 seconds. When power switches are turned on and doors closed standard sequence will automatically fill tank and turn on tank heat. Wash/rinse cycle shall be automatically actuated by closing door.

Utensil washer shall have a centrifugal type packless ball bearing pump with ceramic type seal, stainless steel parts, and a mounted balanced impeller on a precision ground shaft. Utensil washer shall have a 5.5 K.W. motor with internal fan cooling and ball bearing construction.

Utensil washer shall have free-wheeling rotating power wash and rinse arms with two wash and two rinse arms above and two wash and two rinse arms below. Wash and rinse arms shall be easily removable without tools.

Utensil washer shall have a 5 K.W. electric immersion tank heater with positive low water cutoff. Utensil washer shall be wired 208-60-3 phase.

Utensil washer shall be furnished with one general utility rack, one basket rack, one bake sheet rack, wash and rinse thermometers, vacuum breaker, cleanout brush and hold down grid. Utensil washer shall also be furnished with a removable stainless steel front panel.

Also furnished with the utensil washer shall be a 12 K.W. electric booster heater wired 208-60-3 phase. Booster heater shall furnish sufficient 82 degrees C to the utensil washer with 60 degrees C incoming water. Specifications are based on a Champion Model #PP-28.

4.54 ITEM NO. 50a - TABLES, DRAIN BOARDS

Contractor furnished, contractor installed. Table shall be custom fabricated in the size, shape and arrangement as shown on drawing. The entire top shall be constructed of one piece 14 gauge stainless steel with the front and left end edge formed up into a 76 mm high by 38 mm diameter rolled rim. The rear edge of top abutting the wall shall be formed up into a 305 mm high by 64 mm thick backsplash. Front edge of back splash shall be mitered as indicated on plans. Backsplash at left end shall be mitered into the utensil washer as shown on plan. The left end of the top shall be formed down into the utensil washer and secured and sealed in a complete weathertight manner. The entire top shall be mounted to a stainless steel open tube base with an undershelf. This dish table shall otherwise be constructed in accordance with Part 2 of these specifications.

4.55 ITEM NO. 51 - SINK, POT & PAN

Contractor furnished, contractor installed. Pot and pan sink shall be custom fabricated in the size, shape and arrangement shown on Equipment Schedules, Plans, and Details. All free edges of top shall be terminated in a 76 mm high by 38 mm diameter rolled rim. The rear edges of top abutting the wall shall be formed up into a 305 mm high by 64 mm thick backsplash. Front edge of back splash shall be mitered as indicated on plans.

Integrally welded into the left hand drain board shall be a disposer bowl

specified under Item #15. Mounted to the backsplash behind the bowl shall be a pre-rinse faucet specified under Item #52.

Welded integrally into the top shall be three sink compartments and a sump sink as shown on plan. The three sink compartments shall each measure inside approximately 711 mm by 812 mm by 305 mm deep. Each sink shall be fitted with a twist handle drain with overflow. A 14 gauge stainless steel shall be integrally welded to the bottom of each sink to support the drain handle. Mounted to back splash and centered behind the right hand sink and above the partitions between the two left hand sinks shall be a faucet with goose neck spout as specified in Section 2.6.1.2.

Bottom of left sink compartment shall be fitted with a sink heater specified under Item #54. Mounted to the back splash above the left sink compartment shall be a single faucet with 98 mm fixed spout. Faucet inlet shall be connected from the outlet of the booster heater, Item #51a. Faucet shall have a heat resistant handle to withstand 82 degrees C water temperature. Specifications are based on a T&S Brass & Bronze Works Model #B-0700 faucet with Model #001147-45 handle with red index button. Mounted to the back splash shall be a plaque for 82 degrees C hot water that reads, "DANGER, EXTREME HOT WATER" as indicated on plans.

Sump sink shall be 129 mm wide by 102 mm deep and shall be constructed in accordance with plans. Sump sink shall have an 18 gauge stainless steel cove corners all welded perforated basket with 9.5 mm diameter stainless steel rod handles. Bottom of sump sink shall be scored and pitched to a 38 mm open drain fitting.

Top shall be mounted to a stainless steel open tube base open tot he floor with no rail bracing on the working side. Legs not connected to rails in two directions shall have stainless steel flanged feet secured and sealed to the floor. Pot and pan sink shall otherwise be constructed in accordance with Section 2 of these specifications.

4.56 ITEM NO. 51a - HEATERS, BOOSTER

Contractor furnished, contractor installed. Booster heaters shall each be an electric booster heater sized as shown in Equipment Schedules. Booster heaters shall have a 60 liter tank, fiberglass insulation and shall have a stainless steel front panel, body and base. One booster heater shall be located in mechanical room near the can wash area. This booster heater shall be mounted on stainless steel legs, adjustable in height from 152 mm to 203 mm. The other booster heater, which shall be mounted to the underside of the left drainboard of the pot and pan sink, Item #51, shall be without legs and shall be mounted on angle slide brackets.

Booster heaters shall have 15.0 kilowatt elements wired 208-60-3 phase and shall have the capacity to heat 572 liters per hour of water from 60 degrees to 82 degrees C. Heating elements shall be metal sheathed, controlled by close tolerance immersion thermostats. Booster heaters shall be protected with a high temperature limit switch and low water cut-off. Each booster heater shall also be furnished with temperature/pressure relief valve, pressure reducing valve, two temperature/pressure gauges, shock absorber, pilot light and on-off switch. Booster heaters shall be furnished with all standard equipment and shall otherwise be in accordance with the manufacturer's standard specifications. Specifications are based on Hatco Model #S-15.

4.57 ITEM NO. 52 - SPRAYS, PRE-RINSE

Contractor furnished, contractor installed. Pre-rinse faucets shall be mounted to the back splash above the disposer bowl on Item #14 and Item #51. Each shall be a backsplash mounted pre-rinse faucet complete with wall bracket. Faucet shall have 13 mm NPT female inlets spaced 203 mm on center. Faucet shall have internal check valves and shall have stainless steel seats and swiveling seat disks. Faucet shall have a 10 mm NPT female outlet with a 457 mm long vertical riser. Connected to the riser shall be a hose with a stainless steel sheath, an insulated handle, and a spray valve. Pre-rinse unit shall have a coil spring and a hook ton hold the spray valve in position. Faucets shall be in accordance with the manufacturer's standard specifications. Specifications are based on a T&S Brass & Bronze Works Model #B-0133-B.

4.58 ITEM NO. 53 EXHAUST HOOD

Contractor furnished, contractor installed. Exhaust hood shall otherwise be the same as that specified for Item #55.

4.59 ITEM NO. 54 - SINK HEATER, BOOSTER

Contractor furnished, contractor installed. Sink heater shall be an electric sink heater sized as shown in Equipment Schedule. Sink heater shall have a dual reservoir system, one for heating the water and open for trapping and collecting soil from the sink compartment. Sink heater shall have a 50 mm diameter inlet and outlet on the top, a reservoir drain, fiberglass insulation and a stainless steel front panel, body and base. Sink heater shall be mounted to the underside of the sanitizing sink compartment in accordance with the manufacturer's recommendations. Sink heater shall have a 9.0 K.W. element wired 208-60-3 phase and the load shall be balanced on all three phases. Heating element shall be metal sheathed and controlled by a close tolerance immersion thermostat. The sink heater shall be protected with a high temperature limit switch and low water cut-off. Sink heater shall have an on-off switch, pilot light, low water indicator light and rinse temperature gauge. Sink heater shall be furnished with all standard equipment and shall be in accordance with the manufacturer's standard specifications. Specifications are based on a Hatco Model #3CS-9B.

4.60 ITEM NO. 55 - EXHAUST HOOD

Contractor furnished, contractor installed. One only exhaust hood shall be a factory built wall mounted canopy style condensate ventilator. Hood shall be an exhaust only, Type II unit designed specifically for removal of moisture laden air in non-grease applications. Exhaust hood shall measure 1050 mm by 1050 mm by 900 mm high. The mounting height of the hood shall be coordinated with the clearance required to remove the doors of the pot sanitizer, Item #50. Exhaust hood shall be constructed in accordance with the latest requirements of NFPA Bulletin #96 and shall be fabricated according to the National Sanitation Foundation Standard #2 and shall bear the NSF seal. The exhaust hood shall be constructed of 18 gauge type 304 stainless steel with a #4 finish. All exposed welds shall be ground smooth and polished to the original finish of the metal. Internal seams shall be filled with NSF approved non-hardening sealer. Hood shall include a full length removable condensate baffle constructed of 18 gauge type 304 stainless steel. Baffle shall be pitched to drain into a full perimeter welded condensate collecting gutter with a 24 mm N.P.T. stainless steel drain fitting at the left rear corner. Drain line shall be extended from the hood to the floor sink below. Welded in the top center of hood shall

be an exhaust duct collar sized as shown on the mechanical drawings. Duct collar shall be complete with a balancing damper.

Hood shall be furnished with necessary hanger rods and brackets to secure this condensate hood to the building structure above and the wall behind the hood. Hood shall be supplied with stainless steel closure channels as required to close the gap between the top of the exhaust hood and the finished ceiling. Specifications are based on a Gaylord Model #VH-W wall mount condensate hood.

4.61 ITEM NO. 56 - CARTS, STORAGE (POT & PAN)

Government furnished, government installed.

4.62 ITEM NO. 56a - RACK, STROAGE FOR MIXER ACCESSORIES

Government furnished, government installed.

4.63 ITEM NO. 57 - COUNTERS

Contractor furnished, contractor installed. Counters shall be custom fabricated in the size, shape and arrangement shown in the Equipment Schedules, Plans, and Details. Counters shall be constructed of 14 gauge type 304 stainless steel with 41 mm square bent edges. Counters shall be installed flush with low walls and Tray Slides Item #57a as shown on plans. Joint between Counters and Tray Slides shall be sealed. Counters shall have hat channel underbracing. Counters shall otherwise be constructed in accordance with Section 2 of the specifications.

4.64 ITEM NO. 57a - TRAY SLIDES

Tray slides shall be custom fabricated in the size, "U" and "L" shapes and arrangements as shown in the Equipment Schedules, Details, and on plans. Tray slides shall accommodate 356 mm by 457 mm trays. The tray slides shall be constructed of 2.0 mm stainless steel and shall be formed in the configuration shown on plan. The front vertical edge of the tray slide shall be highlighted to a #7 finish. The rear edge of the tray slide shall be highlighted to a #7 finish. The rear edge of the tray slide shall be formed up under the turned down edge of the top. The joint between the top and tray slide shall be tight and shall be neatly sealed and full length. The corners and ends of the tray slide. Shall be mitered as shown on the plans and details. The ends of the tray slides shall be welded closed. The tray slide shall be mounted to the partial height wall with 102 mm high 2.0 mm stainless steel brackets spaced 914 mm o.c. Brackets shall be secured to the tray slide and counter base. The rear side of the partial height wall shall be covered with 1.3 mm stainless steel panels and shall extend down to the top of the finished base material. Panels shall be secured with mastic in a concealed manner. Tray slides shall otherwise be constructed in accordance with Section 2 of the specifications.

4.65 ITEM NO. 57b - CASHIER'S STATION MODULE

Contractor furnished, contractor installed. Cashier's Station Module shall be self-contained, mobile cashier module. Modules shall include metal cash drawer and stainless steel under shelf. The modules are to have recessed push handles at one end. Two removable side panels to be recessed to accept decorator panels. To be listed by National Sanitation Foundation and

Underwriters' Laboratories, Inc. Body material shall be of flame retardant ABS formed plastic fastened to a galvaneal undercarriage. 14 ga. 300 series stainless steel top to have not less than #4 finish. Unit to have bottom shelf for foot rest. Plate mounted 102 mm diameter swivel casters with toe brakes to be provided. Each modules shall have the Folding Trayslide accessory. The tray slides shall be all stainless steel with die-stamped three-rib reinforcement. Tray slides shall accommodate 356 mm by 457 mm trays. Module body shall be black pearl, with decorative insert panels of brushed stainless finish. Specifications are based on a Galley Line, Model #9826, Sanitary, Heavy Duty Cashier's Station Module with manufacturer's accessories as listed above.

4.66 ITEM NO. 58 - HOT FOOD MODULES w/ ACCESSORIES

Contractor furnished, contractor installed. Hot Food Modules shall be a 5-well hot food module, all sides closed, with two stainless steel tray slides, Buffet Canopy (heated and lighted) with Breath Guards and five infrared bulbs, hidden swivel casters with brakes, access panels and side skirts, self-locking and self-aligning. Module material shall be of flame retardant ABS formed plastic fastened to galvaneal steel under-carriage 14 ga. 300 series stainless steel. Top shall be seamless, 14 ga. 300 series stainless steel with a #4 finish. Module body shall be black pearl, with decorative insert panels of brushed stainless finish. Specifications are based on a Galley Line, Model #9051, Heated Module with manufacturer's options and accessories as listed above.

4.67 ITEM NO. 59 - SOUP/SALAD MODULES w/ ACCESSORIES

Contractor furnished, contractor installed.

Salad Modules shall house 127mm (5") deep refrigerated pan with refrigerated base, two doors, and pan slides on 57mm (2 1/4") centers for 305 x 508mm (12" x 20") food pans and 4 white ice drain bases, two Stainless Steel Tray Slides, Buffet Canopy (lighted) with Breath Guards and two flourescent bulbs, hidden swivel casters with brakes, access panels and side skirts, self-locking and self-aligning. Module material shall be of flame retardant ABS formed plastic fastened to galvaneal steel under-carriage 14 ga. 300 series stainless steel. Top shall be seamless, 14 ga. 300 series stainless steel with a #4 finish. Module body shall be black pearl, with decorative insert panels of brushed stainless finish. Specifications are based on a Galley Line, Model #9252, Refrigerated Salad Module with manufacturer's options and accessories as listed above.

Soup Modules shall be a heated module housing two round hot well soup, chili, or cereal module, all sides closed with two stainless steel tray slides, hidden swivel casters with brakes, access panels and side skirts, self-locking and self-aligning, male/female flat-end panel for exposed end. Module material shall be of flame retardant ABS formed plastic fastened to galvaneal steel under-carriage 14 ga. 300 series stainless steel. Top shall be seamless, 14 ga. 300 series stainless steel with a #4 finish. Module body shall be black pearl, with decorative insert panels of brushed stainless finish. Specifications are based on a Galley Line, Model #9012, Heated Module with manufacturer's options and accessories as listed above.

Modules shall be sized as shown in Equipment Schedules.

4.68 ITEM NO. 60 - BREAD DISPENSERS

Government furnished, government installed.

4.69 ITEM NO. 61 - BUTTER DISPENSERS

Government furnished, government installed.

4.70 ITEM NO. 62 - DISPENSERS, BREAD & BUTTER PLATES

Government furnished, government installed.

4.71 ITEM NO. 63 - CORNER MODULES w/ ACCESSORIES

Contractor furnished, contractor installed. Unit shall be 45 degree Corner Modules, all sides closed, with stainless steel tray slides on each side, hidden swivel casters with brakes, access panels and side skirts, anti-locking and self-aligning. Module material shall be of flame retardant ABS formed plastic fastened to galvaneal steel under-carriage 14 ga. 300 series stainless steel. Top shall be seamless, 14 ga. 300 series stainless steel with a #4 finish. Modules shall be sized as shown in the Equipment Schedules. Module body shall be black pearl, with decorative insert panels of brushed stainless finish. Specifications are based on a Galley Line, Models #9424/9425, Module with manufacturer's options and accessories as listed above..

4.72 ITEM NO. 63a - MICROWAVE OVENS

Contractor furnished, contractor installed. Microwave ovens shall have 1,100 watt output top energy feed. Microwave ovens shall be sized as shown in Equipment Schedules. Ovensshall have 34 liters capacity and shall have interior cavity dimensions of 343 mm by 398 mm by 241 mm high. Microwave ovens shall have a digital display control panel to the right of the door with single and multiple program pre-set timing methods, variable entry timing, five power levels and ten programming options. Microwave ovens shall have ten numbered pad with two menus programmable on each pad. Ovens shall have MENU, START, RESET and TIME ENTRY pads and DEFROST, HOLD, MED-HI, and MEDIUM power pads. Microwave ovens shall have a stainless steel exterior with a hinged, see through oven door and lighted interior. Microwave ovens shall be wired 120-60-1 phase and shall be furnished with an electrical cord with a NEMA #5-20P plug. Specifications are based on an Amana Model #RFS11MP2 microwave oven.

4.73 ITEM NO. 64 - OPEN MERCHANDISER

Contractor furnished, contractor installed. Open merchandiser shall be a self-contained air-cooled unit wired 115-60-1 phase with a 16.0 AMPS, 3/4 hp compressor complete with cord and NEMA #5-20P plug. Unit shall to be sized as shown in the Equipment Schedules. Front rail heavy duty, bright stainless steel. Rigid metal body. Foamed in place insulation binds interior and exterior wall surfaces. Top deck 254 mm deep provideing shelving for non-perishable items. Easily removable front grill for serviceing of condensing unit without moving case. Automatic evaporator drain with out plumbing. Automatic defrost timer. Three step white baked acrylic enamel shelf. Cabinet is designed to operate in air condition facility at 24 degrees C and 55% humidity. Specifications are based on a McCray, Model #S32E-6, Open Merchandiser.

4.74 ITEM NO. 65 - CARVING STATIONS

Carving stations shall be a self-contained unit with heat lamp au-jus pan and perforated stainless steel stop with meat prongs. Units shall be fully mobile with 127 mm diameter swivel casters, two with brakes. Top of units shall be constructed of 16 gauge type 304 stainless steel. Unit shall sized as shown in Equipment Schedules.

Units shall be provided with two (2) 600 watt heating elements prewired to a single thermostat control with a pilot, two (2) 1828 mm long 3-wire cord, and plugs are to be provided (NEMA 5-15P).

Specification based on Atlas Metal Industries Set-N-Serv Model CWGP-2 carving cart.

4.75 ITEM NO. 66 - HOT FOOD WELLS (6 PANS)

Contractor furnished, contractor installed. Six section drop-in hot food units shall be by the same manufacturer as the other hot food units and refrigerated pans throughout the project. Hot food units shall be sized as shown in Equipment Schedule. Each hot food warmer shall have three individually heated wells, each measuring 305 mm by 508 mm by 152 mm deep. The top flange shall be 18 gauge stainless steel with a raised beaded edge around the entire perimeter and a solid vinyl gasket to form a tight seal. The wells shall have an inner liner of 18 gauge stainless steel with one piece all welded construction. All corners shall be coved on a minimum of 6 mm radius. Hot food units shall have 25 mm thick high density fiberglass insulation on all sides and 50 mm thick insulation on the bottom. The outer liner shall be constructed of 22 gauge stainless steel.

Each hot food warmer shall be wired 208-60-1 phase and shall have a 1829 mm long cord and NEMA #L6-20P plug. Each well shall have an 850 watt heating element and an individual thermostat control. Hot food warmer shall be provided with standard controls mounted below the wells in a stainless steel control panel. Hot food units shall be installed in the counters, Items #37 and #67, in the locations shown on plan. Hot food warmers shall be mounted into the countertop in accordance with the manufacturer's recommendations and sealed. Specifications are based on Atlas Set-N-Serve Model #WIH-6 hot food warmers.

4.76 ITEM NO. 66a - SHELF PROTECTORS (SNEEZE GUARDS)

Contractor furnished, contractor installed. Shelf protectors shall be mounted to the top of the hot/grill counters, Item #67, as shown on the plan. Each protector shelf shall be sized as shown in Equipment Schedules. Protector shelves shall be mounted on 25 mm square stainless steel posts with the front posts angled back 76 mm at the top. Posts shall be secured to the countertop with concealed mounting bolts on the underside. Posts shall be sealed to the top. Each unit shall have a 241 mm wide full length stainless steel top shelf with all edges formed down square. Front of each protector shelf shall have a glass sneeze guard with stainless steel channel edging. The underside of the top shelf shall have a row of fluorescent lights extending the full length. Lights shall be complete with fluorescent tubes with clear plastic safety shields with end caps. Lights shall be wired 120-60-1 phase and shall have a remote switch mounted in the apron of the counter. Specifications are based on Atlas Set-N-Serve Model PRCL-6 protector case with lights.

4.77 ITEM NO. 67 - COUNTERS

Contractor furnished, contractor installed. Counters shall be custom fabricated in the size, shape and arrangement as shown on plan. Each counter shall be sized as shown in Equipment Schedules, Plans, and Details. The top shall be constructed of 14 gauge stainless steel with a 102 mm high by 25 mm wide backsplash against the building wall and a 51 mm square turn down edge on all other sides. The front edge of counters shall butt tightly against the building wall and the tray slide, Item #100. Joint shall be neatly sealed the full length of the counter. Openings shall be provided in the top for hot food wells specified under Item #66 in the locations shown on plan. Mounted to the tops shall be a sneeze guards specified under Item #66a.

Base of each counter shall be constructed of 18 gauge stainless steel and shall be enclosed on all sides except the working side. The working side of the counters shall have a full length 178 mm deep apron just below the top. Recessed in the apron shall be a light switch for the sneeze guards, Item #66a. The interior of the base shall have a full length 18 gauge stainless steel undershelf measuring 610 mm front to back. Sides of undershelf shall be formed up 38 mm square and shall be tack welded and sealed to the body. The rear edge of undershelf shall be formed up 152 mm high and tightly hemmed. Counters shall be mounted on 152 mm high, 41 mm diameter stainless steel legs with casters. Counters shall otherwise be constructed in accordance with Section 2 of the specifications.

4.78 ITEM NO. 68 - DISPENSERS, DINNER PLATES

Government furnished, government installed.

4.79 ITEM NO. 69 - GRIDDLES

Contractor furnished, contractor installed. Griddles shall each be a natural gas fired clam shell type griddle sized as shown in Equipment Schedules. Griddles shall have double wall construction with stainless steel finish on front and sides. Each griddle shall have a 25 mm thick smooth polished steel griddle plate slightly pitched to the front for drainage to a full length stainless steel gutter. Griddles shall have an integral one piece stainless steel splash guard welded continuously to griddle plate and grease gutter. Each 305 mm of the griddle surface shall have a gas burner rated at 7.9 K.W. and controlled by a snap action thermostat.

Griddles shall have a 610 mm wide stainless steel hinged broiler that slides horizontally on a rear track. Broiler shall have a single infrared burner rated at 10.3 K.W. When the broiler is lowered, the burner shall be full on with no preheat time. There shall be a 76b mm clearance between the griddle surface and the broiler hood. When the hood is raised, the burner is off.

Clam shell griddles shall have a total gas input of 46.9 K.W. and shall have an electronic spark ignition and gas pressure regulator. Griddles shall be wired 120-60-1 phase and shall be furnished with an electrical cord plug. Each clam shell griddle shall be mounted on a portable stand specified under Item #70. Specifications are based on Keating Model 48X30 gas griddle with top side cooker.

A stainless steel angle sized 102mm wide by 102mm deep by full Griddle

length shall be attached to back of unit 25mm below tray slide Item #100 height and sealed at Equipment. This angle shall provide protection for gas connection at rear of Griddle, and ease of cleaning maintenance.

Furnished with each of the griddles shall be a flexible gas connector assembly. Connector shall have a 20 mm by 1524 mm long hydroformed corrugated stainless steel hose with inline braiding and covered with a yellow plastic cover in accordance with ASME standards. The flexible gas connector shall be ANSI Z21.69 design certified. The flexible hose shall be equipped with two swivel connector fittings, a quick disconnect and a 360 degree rotatable hex nut connector fitting. The flexible connector shall be furnished with a coiled restraining device with installation hardware. The flexible connector, fittings and the restraining device shall be equipped with the manufacturer's standard equipment and shall be in accordance with the manufacturer's standard specifications. Specifications are based on Hose Master Model #SLQSP.

4.80 ITEM NO. 70 - GRIDDLE STANDS

Contractor furnished, contractor installed. Griddle stands shall be by the same manufacturer as the griddle Item #69. Each stand shall be sized as shown in the Equipment Schedules. Stands shall have stainless steel legs, reinforced stainless steel undershelf and casters. Top of each stand shall have stainless steel channels which shall be bolted to the underside of the griddles.

4.81 ITEM NO. 70a - SPLASH GUARDS

Contractor furnished, contractor installed. Splash guards shall each be custom fabricated in the size, shape and arrangement as shown in Equipment Schedules, Plans, and Details. Two splash guards shall be 3658 mm long by 38 mm thick by 508 mm high located in Servery Areas 1 & 2. One splash guard shall be 1829mm long by 38mm thick by 508mm high located in Servery Area 3.The splash guards shall extend in front of the griddles and stands, Items #69 and 70. Each splash guard shall be supported by six 38 mm square 1`6 gauge stainless steel posts. The posts shall be welded integrally to the top of the tray slides as shown on detail. The splash guards shall have 6 mm thick tempered glass panels located between the posts and extending from 50 mm above the tray slide to the top of the posts. Each tempered glass panel shall be edged on all sides with stainless steel channels with corners neatly mitered. The tempered glass panels shall be mounted on channels secured to the inside faces of the posts so the panels can be raised for replacement. Splash guards shall otherwise be constructed in accordance with Section 2 of the specifications.

4.82 ITEM NO. 71 - EXHAUST HOODS

Contractor furnished, contractor installed. Exhaust hoods shall be constructed by the same manufacturer as Item #39. Each hood shall be a high velocity water wash ventilator constructed in compliance with NFPA #96, BOCA, ICBO (Uniform Mechanical Code), SSBC and ACGIH (American Conference of Governmental Industrial Hygienists). The exhaust hoods shall be U.L. listed and NSF approved. Exhaust hoods shall be constructed in the shape and arrangement shown on drawing and equipment schedule. Two sizes of hood shall be provided, one at 2700 mm long by 1200 mm wide by 900 mm high, and other at 1500 mm long by 1200 mm wide by 900 mm high. The rear side of each hood shall have a one piece 18 gauge stainless steel rear finishing panel. Exhaust hoods shall be complete with high velocity grease extractors, plenum fire-dampers, duct collars, make-up air plenums, hanger

brackets, auto wash control panels, piping, and nozzles.

Exhaust hoods shall be constructed entirely of 18 gauge type #304 stainless steel with a #4 finish. All external seams and joints shall be welded liquid tight with all exposed welds ground smooth and polished back to original finish. Exhaust hoods shall be furnished with all necessary hanger rods and shall be suspended from building structure above. Hoods shall be supplied with stainless steel closure channels on all sides as required to close the gap between the top of the exhaust hoods and the finished ceiling.

Hoods shall have the same extractor chambers, duct collars, fire dampers, thermostats, and make-up air plenums as specified for Item #39. Hoods shall have fluorescent lights as specified for Item #39, extending the full length of each hood. Each hood shall have a separate wash control panel flush mounted in the wall in the locations shown on plan. These hoods shall otherwise be in accordance with the manufacturer's standard specifications. Specifications are based on Avtec Model #AWWP exhaust hoods.

4.83 ITEM NO. 72 - FIRE SUPPRESSION SYSTEMS

Contractor furnished, contractor installed. Each exhaust hood, Item #71, shall be furnished with a separate liquid agent fire suppression system which shall be mounted on the wall near the ceiling in the locations shown non plan. No conduit or piping shall be exposed to view. Each fire suppression system shall be a U.L. listed liquid agent, cartridge operated, regulated pressure system with a fixed nozzle agent distribution network. The systems shall be capable of automatic detection and actuation with local and remote manual actuation. Each fire suppression system shall be provided with a remote manual pull station recessed in the wall in locations shown on plan. The fire suppression systems shall be factory piped and complete with all necessary surface protection nozzles as required by code. The systems shall be properly sized for the nozzles required. The extinguishing agent shall be a potassium carbonate, potassium acetate-based formulation designed for flame knock down and securement of grease related fires. The regulated release mechanism shall be a spring loaded mechanical/pneumatic type with a nitrogen cartridge for providing the expellant gas supply to the liquid agent tanks. The regulated release mechanism shall contain a factory installed regulator set at 690 kPa. The mechanism shall have a visual indicator of the cocked or fired position without having to open the enclosure. The fire suppression systems shall have an automatic fusible link detection system. The fire suppression systems shall also have a microswitch to allow the shut-off of all gas and electricity for the items below the exhaust hood. Shut-off devices shall be furnished and installed under other sections of the specifications. All exposed piping for the fire suppression systems shall be chrome plated or chrome sleeved. The fire suppression systems shall be installed in accordance with the Underwriter's Laboratories Listing, NFPA 96 and NFPA 17 and shall conform to all local authorities having jurisdiction over this fire suppression system. Upon completion of the installation of the fire suppression systems, a qualified fire suppression installer shall inspect the system and certify in writing that the systems meet all applicable Codes. Specifications are based on Ansul Model #R-102 systems.

4.84 ITEM NO. 73 - CABINETS, FOOD WARMER (PASS-THRU)

Contractor furnished, contractor installed. Pass-thru heated cabinets

shall each be a two section pass through unit with 52 cubic feet capacity. Each heated cabinet shall be sized as shown in Equipment Schedules. The heated cabinets shall have stainless steel interior and exterior with a #4 finish and shall be mounted on 150 mm high stainless steel legs with adjustable stainless steel feet. Heated cabinets shall have half height doors on both sides of the cabinet, hinged as shown on the plan. Doors shall have single or double padlock posts and plates as required. The heated cabinets shall be wired 120/208-60-1 phase and shall be installed with the controls on the kitchen side. Interior of heated cabinets shall be fitted with 32 pairs of universal pan file slides to hold either one 460 mm by 660 mm pan or two 305 mm by 510 mm pans per slide. Slides shall be stainless steel and shall be adjustable on 25 mm centers. Specifications are based on Continental Model #DL2WE-SS heated cabinets.

Supplied with each heated cabinet shall be a stainless steel telescope type frame and kick plate to close it into the openings in the building wall. Frame shall be all welded construction of 14 gauge stainless steel and shall extend up the sides of the pass-thru cabinet and across the top on both sides of the wall. Frame shall be of sufficient width at the sides and top to completely cover the opening. All outer edges of the flange shall be terminated in a hug edge tight against the wall and sealed. Frame shall be secured to the wall in a concealed manner. A 14 gauge stainless steel removable kick plate shall be provided on the kitchen side of wall and shall be mounted to the legs of the heated cabinet with spring clips. Framing and kick plate shall be constructed in accordance with Part 2 of these specifications.

4.85 ITEM NO. 74 - CABINETS, PASTRY STORAGE

Government furnished, government installed.

4.85.1 ITEM NO. 74a - HEAT & HOLD CABINET

Contractor furnished, contractor installed. Cabinet shall be low temperature cooking and holding ovens. Oven controls feature two (2) ON/OFF switches; two (2) cook thermostats, 100 deg. to 325 deg. F (38 deg. to 163 deg. C); and two (2) twelve-hour cooking timers. Control panel includes two (2) cooking indicator lights, and two (2) holding indicator lights. Each oven is equipped with a voltage conversion switch, located on the back of the oven, for voltage selection (208 V.A.C. to 240 V.A.C. 60 Hz, 1 ph) 6000 Watts (max.) and 28./8 Amps (max.) at time of installation. Electrical connection is 786mm (3 3/8" from top center.

Interior shall be 18 gauge non-magnetic (non-corrosive) stainless steel. Provide four (4) non-magnetic stainless steel side racks with shelf rungs spaced at 59mm (2 15/16" centers, six (6) non-magnetic stainless steel wire shelves, and two (2) stainless steel drip pans. Inside dimensions per compartment shall be 479mm by 673mm x 680mm. Full size sheet pan capacity shall be eight (8) per compartment; 18" x 26" x 1".

Cabinet shall be two (2) separately controlled oven compartments, right hand swings, enclosed in one exterior cabinet. Exterior of 22 gauge stainless steel. Two (2) 18 gauge, non-magnetic stainless steel wire shelves, side racks, and drip pans are removable for easy cleaning. The oven includes an external drip tray with removable pan, one (1) full-perimeter bumper, and one (1) set of 127mm (5") heavy duty casters - 2 rigid, and 2 swivel with brake. Net weight shall be 385 lb (175 kg). Specifications are based on Halo Heat Cook/Hold/Serve System by Alto-Shaam, Model 1000-TH-I/HD.

4.86 ITEM NO. 75 - COUNTER

Contractor furnished, contractor installed. Counter shall be custom fabricated in the size, shape and arrangement as shown in Equipment Schedules, Plans, and Details. The top shall be constructed of 14 gauge stainless steel with a 51 mm square turn down edge on all sides. Top extensions shall be integrally welded to the top at each end and shall have the edges formed down 51 mm square to match the remainder of the top. An opening shall be provided in the top counter for a cold pan unit specified under item #76. Mounted to the top shall be a sneeze guard specified under Item #77. Mounted to face shall be a tray slide, specified under ITEM #77a.

Base of counter shall be constructed of 18 gauge stainless steel and shall be enclosed on all sides except the working side. The area below the top extensions shall have a 76 mm thick double wall panel integral with the base of the rest of the counter. At the end of the counter, the double wall panel shall be welded closed and supported with a leg. Interior of counter front shall have frame work to support the tray slides specified under Item #59. The working side of the counters shall have a full length 178 mm deep apron just below the top. Recessed in the apron shall be a light switch for the sneeze guard, Item #77. The interior of the base shall have a full length 18 gauge stainless steel undershelf measuring 610 mm front to back. Sides of undershelf shall be formed up 38 mm square and shall be tack welded and sealed to the body. The rear edge of undershelf shall be formed up 152 mm high and tightly hemmed. Counter shall be mounted on 152 mm high, 41 mm diameter stainless steel legs with adjustable stainless steel feet. Counter shall otherwise be constructed in accordance with Section 2 of the specifications.

4.87 ITEM NO. 76 - COLD PAN (5) DROP-IN UNIT

Contractor furnished, contractor installed. Drop-in refrigerated cold pan unit shall be a five (5) pan unit and shall be constructed by a the same manufacture as all other drop-in hot and cold pans furnished on this project. Each of the five cold pans shall be a standard 305mm by 508mm (12" by 20")dimensioned pan and the total unit shall be sized as shown in Equipment Schedules. Unit shall be cut into Counter Item #75 and provided proper ventilation. Unit shall have an insulated inner liner of 18 gauge stainless steel, type 304, grade 18-8. Unit shall be of one piece, all welded construction. All corners shall be coved with a minimum of 1/4" R. Insulation shall be 1" on sides and 1 1/2" on bottom. The outer case shall be of 22 gauge galvanized steel. Unit shall have embossed mounting lugs along inner surface of top frame to retain removable separator channels. There shall be a solid vinyl gasket under the bead edge to form a seal, preventing seepage or marring of other equipment. The compressor housing shall be fabricated from formed angles and bolted in a rigid form. The entire unit shall be removable from its mounting without the use of tools. A drain shall be equipped for easy wash-out. Unit shall have an hermetically sealed compressor and a 20 month warranty on compressor/condenser system. Compressors shall be single phase, 60 cycle and 120 volts, NEMA 5-15P. Specifications are based on Atlas Set-N-Serve Model #WCM-5 COLD PAN DROP-IN UNIT.

4.88 ITEM NO. 77 - BREATH PROTECTOR/DISPLAY SHELVES

Contractor furnished, contractor installed. Breath protector/display

shelves shall be double deck display stands mounted to the top of the dessert/condiment counters, Item #75 as shown on the plan. Each display stand shall be sized as shown in the Equipment Schedules. Double deck display stands shall be constructed of 25 mm square stainless steel posts secured to the countertop with concealed mounting bolts on the underside. Posts shall be sealed to the top. Each unit shall have a glass shelf at 356 mm and 584 mm above the countertop. Front of each unit, just below each glass shelf, shall have a 152 mm wide glass sneeze guard mounted on stainless steel pivoting brackets. Glass shelves and sneeze guards shall have stainless steel channel edging. The underside of each shelf shall have a row of fluorescent lights extending the full length. Lights shall be complete with fluorescent tubes with clear plastic safety shields with end caps. Lights shall be wired 120-60-1 phase and shall have a remote switch mounted in the apron of the counter. Specifications are based on Atlas Set-N-Serve Model #DDLC-5 double deck display cases with lights.

4.89 ITEM NO. 77a - TRAY SLIDES

Tray slides shall be custom fabricated in the size, shape and arrangement as shown in Equipment Schedules, Plans, and Details. Tray slides shall accommodate 356 mm by 457 mm trays. The tray slides shall be constructed of 2.0 mm stainless steel and shall be formed in the configuration shown on plan. The front vertical edge of the tray slide shall be highlighted to a #7 finish. The rear edge of the tray slide shall be highlighted to a #7 finish. The rear edge of the tray slide shall be formed up under the turned down edge of the top. The joint between the top and tray slide shall be tight and shall be neatly sealed and full length. The corners and ends of the tray slide. Shall be mitered as shown on the plans and details. The ends of the tray slides shall be welded closed. The tray slide shall be mounted to the partial height wall with 102 mm high 2.0 mm stainless steel brackets spaced 914 mm o.c. Brackets shall be secured to the tray slide and counter base. The rear side of the partial height wall shall be covered with 1.3 mm stainless steel panels and shall extend down to the top of the ceramic tile base. Panels shall be secured with mastic in a concealed manner. Tray slides shall otherwise be constructed in accordance with Section 2 of the specifications.

4.90 ITEM NO. 78 - REFRIGERATORS, PASS-THRU w/ RACKS

Contractor furnished, contractor installed. Roll-thru refrigerators shall be similar as that specified for Item #29 except without the safety thaw option and furnished with triple-pane temp hinged glass doors on both sides of the cabinets. Pass-thru refrigerators shall be installed in the wall opening as shown on plan with the thermometers located on the kitchen side. **Specifications are based on Victory RIS-2D-S7-PT. (am#4)**

deleted paragraph (am#4)

4.91 ITEM NO. 79 - TOASTERS

Government furnished, government installed.

4.92 ITEM NO. 80 - DISPENSERS, SODA

Vendor furnished, vendor installed.

4.93 ITEM NO. 81 - COUNTERS w/ TROUGH

Contractor furnished, contractor installed. Counters shall be custom fabricated in the size, "L" shape and arrangement as shown in Equipment Schedules, Plans, and Details. The top shall be constructed of 14 gauge stainless steel with a 102 mm high by 25 mm wide backsplash against the building walls and a 51 mm square turn down edge on all other sides. Integrally welded in each top in locations shown on plan shall be two drip troughs measuring 127 mm wide by 25 mm deep. Each trough shall be screed and pitched to 38 mm diameter chrome plated brass drain outlet located at the end nearest the floor drain. A 25 mm hard copper drain line shall be extended from each drain to the floor drain below. Top of each counter shall be adequately underbraced to support the weight of the beverage equipment. All openings required in the top for utility lines shall be die formed up and shall be sized to fit each line.

Base of each counter shall be constructed of 18 gauge stainless steel and shall be enclosed on all sides. The front of each stand, below the tray slide mounts, shall have a total of 5 hinged doors. Each door shall be insulated 18 gauge stainless steel double pan construction with full height stainless steel piano hinges and recessed stainless steel pulls. The interior of the base shall have a full length 18 gauge stainless steel undershelf measuring 610 mm front to back. Sides of undershelf shall be formed up 38 mm square and shall be tack welded and sealed to the body. The rear edge of undershelf shall be formed up 152 mm high and tightly hemmed. Counters shall be mounted on 152 mm high, 41 mm diameter stainless steel legs with adjustable stainless steel feet. Beverage counters shall otherwise be constructed in accordance with Section 2 of the specifications.

4.94 ITEM NO. 81a - TRAY SLIDES

Contractor furnished, contractor installed. Tray slides shall each be custom fabricated in the size, "L" shape and arrangement as shown in Equipment Schedules, Plans, and Details. Tray slides shall accommodate 356 mm by 457 mm trays. The tray slides shall be constructed of 2.0 mm stainless steel and shall be formed in the configuration shown on plan. The front vertical edge of the tray slides shall be highlighted to a #7 finish. The rear edge of the tray slides shall be formed up under the turned down edge of the top. The joint between the top and tray slide shall be tight and shall be neatly sealed and full length. The corners and ends of the tray slides shall be mitered as shown on the plan and details. The ends of the tray slides shall be welded closed. The tray slides shall be mounted to the body of the counters (Items #81) with 152 mm high 2.0 mm stainless steel brackets spaced 914 mm on center. Brackets shall be secured to the tray slide and counter base. Tray slides shall otherwise be constructed in accordance with Section 2 of the specifications.

4.95 ITEM NO. 82 - FRUIT JUICE DISPENSERS

Vendor furnished, vendor installed.

4.96 ITEM NO. 83 - SANDWICH UNITS w/ SNEEZE GUARDS

Government furnished, government installed.

4.97 ITEM NO. 84 - ICE DISPENSERS

Contractor furnished, contractor installed. Ice dispensers shall each be a 114 kg manual fill countertop unit sized as shown in Equipment Schedules.

Dispensers shall have a 20 gauge type 304 stainless steel exterior and a plastic bin interior with foamed in place urethane insulation. Ice dispensing shall result from a paddle wheel which lifts and agitates the ice. Ice bins shall have a push button for dispensing the ice and shall also be furnished with a water faucet attachment. Ice dispensers shall have a drain trough with grate. The dispensers shall have a stainless steel front panel in lieu of the standard plastic decor panel. Dispensers shall be mounted and sealed to countertop of beverage counters, Item #81. Ice dispensers shall be wired 120-60-1 phase and complete with 2440 mm cord and plug. Specifications are based on SerVend Model #M-250 dispensers.

4.98 ITEM NO. 85 - DISPENSERS, JUICE

Government furnished, government installed.

4.99 ITEM NO. 86 - COUNTERS w/ THROUGHS

Contractor furnished, contractor installed. Counters shall be custom fabricated in the size, shape and arrangement as shown in Equipment Schedules, Plans, and Details. The top shall be constructed of 14 gauge stainless steel with a 102 mm high by 25 mm wide backsplash against the building walls and a 51 mm square turn down edge on all other sides. Integrally welded in each top in locations shown on plan shall be two drip troughs measuring 127 mm wide by 25 mm deep. Each trough shall be scored and pitched to 38 mm diameter chrome plated brass drain outlet located at the end nearest the floor drain. A 25 mm hard copper drain line shall be extended from each drain to the floor drain below. Top of each counter shall be adequately underbraced to support the weight of the beverage equipment. All openings required in the top for utility lines shall be die formed up and shall be sized to fit each line.

Base of each counter shall be constructed of 18 gauge stainless steel and shall be enclosed on all sides. The front of each stand, below the tray slide mounts, shall have a total of 5 hinged doors. Each door shall be insulated 18 gauge stainless steel double pan construction with full height stainless steel piano hinges and recessed stainless steel pulls. The interior of the base shall have a full length 18 gauge stainless steel undershelf measuring 610 mm front to back. Sides of undershelf shall be formed up 38 mm square and shall be tack welded and sealed to the body. The rear edge of undershelf shall be formed up 152 mm high and tightly hemmed. Counters shall be mounted on 152 mm high, 41 mm diameter stainless steel legs with adjustable stainless steel feet. Beverage counters shall otherwise be constructed in accordance with Section 2 of the specifications.

4.100 ITEM NO. 86a - TRAY SLIDES

Contractor furnished, contractor installed. Tray slides shall be custom fabricated in the size, shape and arrangement as shown in Equipment Schedules, Plans, and Details. Tray slides shall accommodate 356 mm by 457 mm trays. The tray slides shall be constructed of 2.0 mm stainless steel and shall be formed in the configuration shown on plan. The front vertical edge of the tray slides shall be highlighted to a #7 finish. The rear edge of the tray slides shall be formed up under the turned down edge of the top. The joint between the tops and tray slides shall be tight and shall be neatly sealed the full length. The ends of the tray slides shall be mitered as shown on the plan and details. The ends of the tray slides shall be welded closed. The tray slides shall be mounted to the body of the counters with 152 mm high 2.0 mm stainless steel brackets spaced 914 mm on center. Brackets shall be secured to the tray slide and counter base.

Tray slides shall otherwise be constructed in accordance with Section 2 of the specifications.

4.101 ITEM NO. 87 - DISPENSERS, MILK

Government furnished, government installed.

4.102 ITEM NO. 88 - DISPENSERS, CUP & GLASS

Government furnished, government installed.

4.103 ITEM NO. 89 - COLD FOOD TABLES w/ SLIDES & GUARDS

Contractor furnished, contractor installed. Cold Food Tables shall house a six-inch deep insulated 1603mm long x 505mm wide pan, kept cold by efficient copper refrigeration tubing and a selfcontained, adjustable condensing unit. The tables shall have a refrigerated understorage with accessible with two (2) doors which allow complete access to the interior storage area, two adjustble wire shelves, and stainless steel front panels. Unit shall have one-inch drain and valve for ease in maintenance. Tables shall be provided with Dual Service Two-Tier Display and Solid V Tray Slide. Tables shall have a 5-20P plug, 12 amp, 1/2 H.P.. Specifications are based on a Shelleyglas Cold Food Unit, Model KCSC-74 Series, Self-Contained Refrigerated Cold Pan Serving Counter with Refrigerated Understorage Compartments, options and accessories as noted above.

4.104 ITEM NO. 90 - NOT USED

4.105 ITEM NO. 91 - FLOOR TROUGHS w/ GRATES

Contractor furnished, contractor installed. Floor troughs with grates shall be sized as shown in Equipment Schedules, Plans, and Details. Floor troughs and grates shall otherwise be the same as those specified for Item #12.

4.106 ITEM NO. 92 - ICE MAKING MACHINES

Contractor furnished, contractor installed. Ice making machines shall each be a cube type ice maker with an Air Conditioning and Refrigeration Institute certified production capacity of 395 kg of ice per 24 hours at 32 degrees C water temperature in accordance with ARI Standard 810-91. Ice making machines shall have stainless steel exterior panels. Each ice making machine shall be sized as shown in Equipment Schedules. Ice making machines shall produce rhomboid shaped cubes measuring 22 mm by 22 mm by 22 mm. Ice making machines shall have an ice thickness control to assure uniform ice thickness without using pressure controls and thermostats or requiring adjustments for fluctuation in air or water temperatures. The evaporator shall be vertical and ice shall be harvested by gravity without mechanical assistance. Each ice making machine shall have an air cooled condenser and shall be wired 208-60-3 phase.

Ice making machines shall be mounted on ARI certified ice bins which shall be rated in accordance with ARI Standard 820-88 as having a storage capacity of 255 kg. Ice bins shall be by the same manufacturer as the ice makers. Ice bin liners shall be seamless polyethylene. Overall size of the ice bins shall be 1067 mm wide by 801 mm deep by 1181 mm high including

legs. Ice bins shall be furnished with stainless steel exterior finish to match the ice makers and shall be mounted on 16y5 mm high stainless steel legs with adjustable feet. Ice makers shall be mounted to the top of the ice bins in accordance with the manufacturer's recommendation. The bins shall be equipped with stainless steel adapters to mount 762 mm ice machines. Ice making machines shall be equipped with the manufacturer's standard equipment. Specifications are based on Manitowoc Model #BD-1300 makers and Model #C-730S bins.

4.107 ITEM NO. 93 - (NOT USED)

4.108 ITEM NO. 94 - SYRUP TANK RACK

Contractor furnished, contractor installed. Syrup tank rack shall be an all welded aluminum rack sized as shown in Equipment Schedules. Rack shall have a capacity of 25 syrup cannisters with a bottom reinforced shelf and three upper shelves. Rack shall be constructed of 25 mm by 50 mm by 3 mm thick extruded aluminum channels with 32 mm by 50 mm by 3 mm channel and 50 mm by 50 mm by 3 mm angle cross bracing. All members shall be fully welded to form a rigid structure. Welded horizontally on the rear and sides between the uprights shall be 25 mm square aluminum tubing to act as retainers for the metal syrup tanks. The uprights shall be fitted with adjustable feet.

The bottom shelf shall be constructed of 2.5 mm aluminum with the rear and ends formed up 25 mm and formed down 50 mm on the front. The bottom shelf shall be reinforced longitudinally with 25 mm by 75 mm by 3 mm tubular members and crosswise with two 50 mm by 100 mm by 3 mm flanged channels,. The three upper shelve shall be constructed of 2.5 mm aluminum with formed dividers to hold the empty syrup tanks in position. A full length 203 mm by 2.5 mm aluminum panel shall be welded in place on the rear side to provide a mounting surface for the beverage system components supplied by the Vendor. The rack shall also be equipped with safety chain to secure the CO_2 cylinders provided by the Vendor. The rack shall be furnished in accordance with the manufacturer's standard specifications. Specifications are based on Servolift/Eastern Model #STR3.

4.109 ITEM NO. 95 - COFFEE DISPENSERS w/ PRE-HEATERS

Contractor furnished, contractor installed. Coffee dispensers shall be a two product liquid concentrate type dispenser sized as shown in Equipment Schedule. Dispensers shall have a capacity of up to 340 liters of coffee per hour. Dispensers shall have a stainless steel exterior with a hinged door on the front and a drip trough. Dispensers shall hold two 2 liter bag-in-box containers of coffee concentrate. Dispensers shall have two faucets for continuous coffee flow and shall have adjustable coffee strength. Coffee dispensers shall be wired 208-60-1 phase. Specifications are based on a Moccomat (Douwe Egberts) Model Prestige K-72.

Furnished with the coffee dispenser and mounted in the base of the beverage counter, Item #81, shall be a 38 liter water pre-heater, wired 120-60-1 phase. Water heater shall have a temperature range of 43 degrees to 77 degrees C and shall be preset at 49 degrees C. Specifications are based on a Vanguard Model #6E730.

4.110 ITEM NO. 96 - COFFEE URN

Contractor furnished, contractor installed. Coffee urn shall be a fully automatic electric heated dual wall insulated single tank, six (6) gallon

coffee brewer and dispenser. Coffee urn shall be sized as shown in Equipment Schedules. Coffee urn shall be constructed of 304, 18-8 stainless steel. Coffee urn shall have fresh water brewing in a closed chamber and brew up to 16 gallons per hour (450-5 oz. cups per hour) Coffee urn shall have automatic refill of water jacket, automatic coffee agitation and adjustable by-pass on spray arm and teflon coating on spray arm piston. Coffee urn shall have dial thermometer with marked brew zone and low water cut-off. Coffee urn shall be equipped with NSF covers and stainless steel brew basket with 25 filter papers. Coffee urn shall have a bottom drain valve with hose connection. Coffee urn shall be equipped with coffee and water faucets with glass gauges. Coffee urn shall otherwise be equipped with the manufacturer's standard equipment. Specifications are based on American Beverage Systems, MID LINE Automatic Coffee Urn, Single Model #7416.

4.110.1 ITEM NO. 96a - COUNTER w/ TRAY SLIDE

Contractor furnished, contractor installed. Counter shall be custom fabricated in the size, shape and arrangement shown on Equipment Schedules, Plans, and Details. Top shall be constructed of 2.0 mm stainless steel with the front and end edges formed down 38 mm square. The front edge of the counter shall be mitered on a 45 degree angle as shown on the plan. Counter shall be provided with a built-in, stainless steel trough, grate, and drain per plans and Details. A tray slide shall be custom fabricated per Details and as shown in Plans. Tray slide shall accommodate 356mm by 457 mm trays. Tray slide shall be constructed of 2.0 mm stainless steel and shall be formed in the configuration shown on plan., The front vertical edge of the tray slide shall be formed up under the turned down edge of the top. The joint between the top and tray slide shall be tight and shall be neatly sealed the full length. The ends of the tray slide shall be mitered as shown on plan and details. Brackets shall be secured to the tray slide and counter base. Tray slide shall otherwise be constructed in accordance with Section 2 of the specifications.

Counter top shall be mounted to a stainless steel open tube base. The base shall have a full length 1.3 mm stainless steel undershelf.

4.111 ITEM NO. 97 - COUNTERS

Contractor furnished, contractor installed. Counters shall be custom fabricated in the size, shape and arrangement as shown in the Equipment Schedules, Plans, and Details. The tops shall be constructed of 14 gauge stainless steel with a 51 mm square turn down edge on all sides.

Base of counters shall be constructed of 18 gauge stainless steel and shall be enclosed on all sides except the working side. Interior of counter front s shall have frame work to support the tray slides specified under Item #79a. The working side of the stands shall have a full length 178 mm deep apron just below the top. The interior of the base shall have a full length 18 gauge stainless steel undershelf measuring 610 mm front to back. Sides of undershelf shall be formed up 38 mm square and shall be tack welded and sealed to the body. The rear edge of undershelf shall be formed up 152 mm high and tightly hemmed. Counters shall be mounted on 152 mm high, 41 mm diameter stainless steel legs with adjustable stainless steel feet. Counters shall otherwise be constructed in accordance with Section 2 of the specifications.

4.112 ITEM NO. 97a - TRAY SLIDES

Contractor furnished, contractor installed. Tray slides shall be custom fabricated in the size, shape and arrangement as shown in Equipment Schedules, Plans, and Details. Tray slides shall accommodate 356 mm by 457 mm trays. The tray slides shall be constructed of 2.0 mm stainless steel and shall be formed in the configuration shown on plan. The front vertical edge of the tray slides shall be highlighted to a #7 finish. The rear edge of the tray slides shall be formed up under the turned down edge of the top. The joint between the tops and tray slides shall be tight and shall be neatly sealed the full length. The ends of the tray slides shall be mitered as shown on the plan and details. The ends of the tray slides shall be welded closed. The tray slides shall be mounted to the body of the counters (Items #97) with 152 mm high 2.0 mm stainless steel brackets spaced 914 mm on center. Brackets shall be secured to the tray slide and counter base. Tray slides shall otherwise be constructed in accordance with Section 2 of the specifications.

4.113 ITEM NO. 98 - CONDIMENT PACK RACKS

Contractor furnished, contractor installed. Condiment pack racks shall each include the rack and containers. Each rack shall be sized as shown in the Equipment Schedules. Each three tiered rack shall be constructed of polyethylene and shall accommodate and be furnished with three rows of three condiment bins, total of nine. Each condiment bin shall be constructed of polyethylene and shall measure 125 mm wide by 305 mm deep by 110 mm high. Each bin shall be mounted to the rack with a grooved ledge moulded in to the rear of each bin. The bins and racks shall be in black color. Specifications are based on Cambro Model #9R9.

4.114 ITEM NO. 99 - CAPPUCCINO MACHINES

Government furnished,Government installed.

4.115 ITEM NO. 100 - TRAY SLIDES

Contractor furnished, contractor installed. Tray slides shall be custom fabricated in the size, "L" shape, and arrangement as shown in Equipment Schedules, Plans, and Details. Tray slides shall accommodate 356 mm x 457 mm trays. The tray slides shall be constructed of 2.0 mm stainless steel and shall be formed in the configuration shown on plan. The front vertical edge of the tray slides shall be highlighted to a #7 finish. The rear edge of the tray slides shall be formed down and anchored to the rear side of the blocking. The rear edge of the tray slides shall fit tight against the front edge of the counters (Items #67 and 128) and shall be neatly sealed and full length. The ends of the tray slides shall fit tight against the building walls and shall be sealed. The tray slides shall be mounted to the partial height wall with 102 mm high 2.0 mm stainless steel brackets spaced 914 mm on center. Brackets shall be secured to the tray slide and counter base. The rear side of the partial height wall below the tray slide shall be covered with 1.3 mm stainless steel panels. Panels shall lap under the rear turn down edge of the tray slide and shall extend down to the top of the quarry tile base. Panels shall be secured with mastic in a concealed manner. Item No. 70a shall be mounted as shown in Plans and Details. Tray slides shall otherwise be constructed in accordance with Section 2 of the specifications.

4.116 ITEM NO. 101 - SOFT SERVE MACHINE

Contractor furnished, contractor installed. Soft serve machines shall each be an air cooled, self contained, floor model with heat treatment system.

Each machine shall be sized as shown in Equipment Schedules. Each machine shall have the capacity to have two flavors and a combination of both flavors in a twist shape. Each machine shall be constructed of stainless steel and mounted on 191 mm legs with casters. Each machine shall have two 3.2 liter freezing legs with casters. Each machine shall have two 3.2 liter freezing cylinders, two 18.9 liter insulated mix hoppers, indicator lights for insufficient mix level, electronic controls for product consistency and power interrupt and lock-out if product reaches unsafe temperatures. Each machine shall have two 1.1 K.W. beater motors and two approximately 9,500 BTU/HR compressors utilizing R404A refrigerant. Each machine shall be wired 208-60-3 phase for two hard wired connections. Each machine shall be for self serve and equipped with draw valve lock kit. Specifications are based on Taylor Model #754.

4.117 ITEM NO. 102 - CONVEYORS w/ SOILED TRAY TABLES

Contractor furnished, contractor installed. Conveyors and tables shall each be custom fabricated in the size, shape and arrangement as shown in the Equipment Schedules, Plans, and Details. Each top shall be constructed of one piece 14 gauge, type 304, 18-8 stainless steel with a #4 finish. Each top shall be formed up against the walls, as indicated on the plan, 254 mm in the configuration as indicated on plan. The backsplash shall be attached to the wall with "Z" clips. Each top, in the dish room, shall be formed up into a 76 mm high by 38 mm diameter rolled rim. Each top in the tray return area shall be mitered up 64 mm and then formed out over the short wall as indicated on the above referenced Detail and down 51 mm, or to cover the sill plate. The center of each top shall have a full length coved corner recessed area sized for the roller conveyor. Each conveyor shall be a 14 gauge stainless steel angle frame for raised rollers in four equal sections. The angle frames shall be equipped with 376 mm long by 48 mm diameter plastic rollers on 102 mm centers. Each roller shall be equipped with non corrosive ball bearings with stainless steel hexagonal shaft. The shaft shall be provided with self-locking snap-in mechanism without cotter pins or locking rings. Each roller conveyor shall be gravity operated with a pitch of 7 degrees. Specifications are based on Caddy Model #RA-29-P frame with Model #R-40-P rollers. The roller conveyor shall transport 356 mm by 452 mm trays.

Each top shall be mounted on an open tube stainless steel base with cross and longitudinal rails as indicated on plan. The legs shall be fitted with stainless steel adjustable feet. The bases shall be stabilized to the wall with brackets as indicated on the Detail. The low end of each recess for the roller conveyor is to be fitted with a 50 mm diameter drain. Provide plastic strip curtains at the openings into the dishwashing room over each conveyor. The bottom of the strip curtains shall provide a 304 mm clearance above the roller conveyor. Each backsplash and rolled rim, on the dish room side of the opening from the tray return areas, shall have a water-tight notch to accommodate the metal coiling counter door.

Each conveyor and table shall be integral with Item #103 and shall be coordinated with Items #24 and #115. Each conveyor shall otherwise be constructed in accordance with Section 2 of these specifications.

4.118 ITEM NO. 103 - SOILED DISHTABLES w/ TROUGHS

Contractor furnished, contractor installed. Soiled dish tables shall each be custom fabricated in the size, shape and arrangement as shown in the Equipment Schedules, Plans, and Details. Each top shall be constructed of one piece 14 gauge, type 304, 18-8 stainless steel with a #4 finish. Each

top shall be formed up against the rear wall, as indicated on the plan, 254 mm in the configuration as indicated on plan. The backsplash shall be attached to the wall with "Z" clips. The front edge of each top in the dish room shall be formed up into a 76 mm high by 38 mm diameter rolled rim. Formed integrally into the front side of each dishtable shall be a trough, sized as indicated on the drawings and to the waste pulper system, Item #24. Each trough shall have all coved corners and sloped to the disposer/grinder of the pulper system as required. The shallow end of each trough shall be fitted with the return water inlet and diffuser as required by the pulping system. The return piping of the pulper system shall be strapped to the underside of each table top behind the trough in an approved manner. The opposite end of each trough shall be angled to the trough connection on the pulper/grinder and mated to the trough connection as required by the pulping system. A full width portion of each waste trough, adjacent to the pulper/grinder location, shall be recessed 102 mm deep and shall measure 609 mm long. Each recessed area shall be provided as a silver saver. Half of the recessed area shall be sloped back up to the pulper/grinder flange trough connection. The bottom of each recess shall be fitted with a 50 mm drain. The table tops shall pitch to the troughs.

Each top shall be mounted on an open tube stainless steel base as indicated on plan with cross and longitudinal rail bracing and intermediate vertical supports. The rear of the open tube bases shall be stabilized to the wall with brackets as indicated on the Detail. The legs shall be fitted with stainless steel adjustable feet.

Each soiled dishtable shall be integral with Items #102 and #111 and shall be coordinated with Items #24, #108, #112 and #115. Each dishtable shall otherwise be constructed in accordance with Section 2 of these specifications.

4.119 ITEM NO. 104 - DISHWASHING MACHINE

Contractor furnished, contractor installed. Dishwashing machines shall be fully automatic rack type machines for left to right operation. The dishwashing machine shall sized as shown in Equipment Schedules. The dishwashing machine shall have a 558 mm pre-wash section, a 1117 mm power wash section and a 1117 mm power rinse and final rinse section. The dishwashing machine shall have a capacity of 250 - 508 mm by 508 mm racks per hour. The dishwashing machine shall have stainless steel pump and impeller, easily removable stainless steel wash and power rinse arms and stainless steel frame, legs and feet. The dishwashing machine shall have stainless steel front panel and a full size removable stainless steel rear finished panel constructed in sections to match the sections of the dishwasher. The dishwashing machine shall have automatic fill, auto timer, table limit switch, built-in integral wiring channel, removable self-flushing stainless steel strainer pans and baskets. The dishwashing machine shall have door interlocks, door actuated drain closer, common drain at the soiled end, solid state automatic thermistor temperature control and positive low water heater and pump seal protection. The dishwashing machine shall have electric tank heat with the motors and heat wired 208-60-3 phase with single point electrical connection. The dishwashing machine shall have a 120 volt pilot circuit. Dishwashing machine shall also be equipped with vent fan control feature.

Each end of the dishwashing machine shall be equipped with an extended vent hood with locking damper. The bottom front and rear of each extended vent hood shall be equipped with 14 gauge stainless steel extensions to close

the gap between the bottom of the extended vent hood and the rolled rim of the dishtable. The dishwashing machine shall be equipped with a total of six only heavy duty plastic peg type racks and four only combination type racks. Dishwashing machine shall be equipped with the manufacturer's standard equipment. Specifications are based on a Stero Model #SCT 120S dishwasher.

4.120 ITEM NO. 105 - WASTE PULPING EXTRACTOR

Contractor furnished, contractor installed. Waste pulping extractor shall be by the same manufacturer as the other components of the waste system -the waste pulpers, Item #24 and the disposers, Item #15. The extractor shall be sized as shown in Equipment Schedules. The extractor shall have a capacity of 1360 kg per hour of food service waste mix, consisting of food scraps, plastics, milk cartons, paper, aluminum foil and cardboard. The extractor shall consist of a rigid stainless steel weldment with stainless steel legs, head assembly with two 3.7 K.W. totally enclosed, fan cooled, belt driven motor matched to a 25:1 gear reducer, 711 mm long stainless steel discharge chute with limit switch, chemical additive pump and automatic rinse system. The water extractor mechanism shall consist of two 229 mm diameter stainless steel screws each with a nylon brush edge, stainless steel adjustable gate and matching 229 mm diameter reinforced stainless steel screen. The extractor shall be equipped with a pulp level detector. The extractor shall be equipped with a 5.6 K.W. return pump. The extractor shall be wired 208-40-3 phase and shall have a total load not to exceed 60.0 amps.

All exterior surfaces, except where polished stainless steel shall be prime coated and finished with two coats of enamel paint. The extractor shall be coordinated with Items #15 and #24 to function as a complete system. The specifications are based on a Somat Model #HE-9S extractor.

4.121 ITEM NO. 106 - DOLLYS

Government furnished, government installed.

4.122 ITEM NO. 107 - DUCT SETS

Contractor furnished, contractor installed. Ducts shall be custom fabricated in the size, shape and arrangement as shown on the plan, measuring overall approximately 102 mm by 406 mm. Each duct shall be constructed of all welded 18 gauge type 304, 18-8 stainless steel. Each duct shall extend straight up from the locking damper assembly on the dishwashing machine extended vent hoods, through the finished ceiling and then tied to the building exhaust system. Each duct shall fit inside the locking damper assembly and shall be water-tight. Each vent duct at the ceiling shall be fitted with an 18 gauge stainless steel flange measuring overall approximately 38 mm by 38 mm which shall be tack welded to the duct to keep the vent duct rigid. The vent ducts shall otherwise be constructed in accordance with Section 2 of these specifications.

4.123 ITEM NO. 108 - SILVER SOAK SINKS

Government furnished, government installed.

4.124 ITEM NO. 109 - SERVICE SINKS FLOOR MOUNTED

Contractor furnished, contractor installed. Service sinks shall each be constructed of 16 gauge, type 304 stainless steel with a deep drawn

seamless sink bowl with a "V" edge on three sides. The rear edge shall be formed up into a tile edge. Each sink shall be sized as shown in Equipment Schedules. Each service sink shall be equipped with a 50 mm drain, service faucet, mop hanger, hose and bracket. Each service sink shall be in accordance with the manufacturer's standard specifications. Specifications are based on Advance Model #9-OP-28 service sink and accessories.

4.125 ITEM NO. 110 - CLEAN DISHTABLE

Contractor furnished, contractor installed. Clean dishtable shall be custom fabricated in the size, shape and arrangement as shown on the Equipment Schedules, Details, and Plans. Top shall be constructed of 14 gauge, type 304, 18-8 stainless steel with the free edges formed up into a 76 mm high by 38 mm diameter rolled rim. The remaining edge shall be formed down into the dishwashing machine, Item #104, and shall be secured and sealed in place. The top shall be mounted on an open tube stainless steel base with stainless steel adjustable flanged feet. The base of the table shall be equipped with a stainless steel undershelf from the free end to the booster heater, ITEM NO. 136. The clean dishtable shall otherwise be constructed in accordance with Section 2 of these specifications.

4.126 ITEM NO. 111 - CONVEYORS w/ SOILED TRAY TABLES

Contractor furnished, contractor installed. Conveyors shall be custom fabricated in the size, shape and arrangement as shown in the Equipment Schedules, Plans, and Details. Top shall be constructed of one piece 14 gauge, type 304, 18-8 stainless steel with a #4 finish. The entire top shall be recessed to accommodate the roller conveyor sections with the top of the rollers at the same height as the top of Item #103. Top shall be formed up against the walls, as indicated on the plan and details withthe height to match the backsplash of Item #103. The backsplash shall be attached to the wall with "Z" slips. The front edges of the top shall be formed up into a 38 mm diameter rolled rim with the height of the rim to match the rim on Item #103. The ends of the top adjacent to Items #103 shall be formed up and welded integrally to Items #103. The end of the table adjacent to Item #104, Dishwashing Machine, shall be formed up, over and down into Item #104, secured and sealed in place. The recessed area of the tables shall not interfere with the soiled end of the dishwashing machine below the table top. The top shall have three 50 mm drains.

Mounted into the recessed top shall be roller conveyor sections. The roller conveyor sections shall transport 508 mm by 508 mm dish racks and shall have 559 mm long stainless steel rollers on 102 mm centers. The roller conveyor sections shall have stainless steel angle frame for raised rollers, similar to that specified under Item #102. The frame for the two curved sections shall be constructed of 12 gauge stainless steel flat bar with 14 gauge stainless steel angle crossbars at both ends and intermediate locations. The roller conveyors shall be gravity operated with the pitch not to exceed 7 degrees. The straight sections of the roller conveyor shall be in equal lengths, not to exceed 1067 mm. The sections of the roller conveyor shall be connected in a removable manner. Specifications are based on Caddy Model #RA-28-S frame with Model #R-30-S rollers. The curved sections are based on Caddy Model #RA-36-S with stainless steel rollers.

Top shall be mounted on an open tube stainless steel base with cross and longitudinal rails as indicated on plan. The legs shall be fitted with stainless steel adjustable feet. The bases shall be stabilized to the wall with brackets as indicated on the Detail. The conveyors shall be

coordinated with Items #103 and #104. Each conveyor shall otherwise be constructed in accordance with Section 2 of these specifications.

4.127 ITEM NO. 112 - SPRAY ASSEMBLIES

Contractor furnished, contractor installed. Spray assemblies shall each be a back splash mounted spring action unit with water inlets on 203 mm centers. Each assembly shall be equipped with a faucet, riser pipe, wall bracket, stainless steel flexible hose, spring coil, squeeze valve and low flow spray valve. Faucet shall be equipped with lever handles. Each unit shall be chrome plated, except for the stainless steel parts and the non metal parts of the nozzle. Each spray assembly shall be mounted to Item #103 as indicated on the plan. Specifications are based on T & S Model #B-0133C assembly.

4.128 ITEM NO. 113 - CLEAN/SANITIZING MACHINE

Government furnished, government installed.

4.129 ITEM NO. 114 - BOWL DISPENSERS w/ COVERS

Government furnished, government installed.

4.130 ITEM NO. 115 - WALL MOUNTED SORTING SHELVES

Contractor furnished, contractor installed. Open tubular wall shelves shall each be in the size, shape and arrangement as shown on the drawing,. The solid ends shall be constructed of 14 gauge type 304 stainless steel. The four tubes shall be 41 mm 18 gauge stainless steel tubing and shall be TI welded to the solid ends. Each shelf shall be mounted to the wall with the bottom of the shelf mounted 508 mm above the top of Items #103. Specifications are based on Advance Model #DT-6R-04 shelves.

4.131 ITEM NO. 116 - WALL MOUNTED FLAT SHELF

Contractor furnished, contractor installed. Wall shelves shall each be in the size, shape and arrangement as shown on the drawing. Each shelf shall be constructed of 18 gauge stainless steel with the front rolled down 38 mm and the rear and ends formed up 25 mm. Each shelf shall be mounted to the wall 1829 mm above the finished floor. Specifications are based on Advance Model #WS-10-72 shelves.

4.132 ITEM NO. 117 - TRAY DISPENSERS

Government furnished, government installed.

4.133 ITEM NO. 118 - BREAD RACKS

Furnished by Vendor.

4.134 ITEM NO. 119 - PROOFING CABINET

Government furnished, government installed.

4.135 ITEM NO. 120 - DISPLAY REFRIGERATORS

Contractor furnished, contractor installed. Display refrigerators shall be a self contained air cooled unit wired 120-60-1 phase with a .25 K.W. compressor complete with cord and NEMA #5-20P plug. Each refrigerator

shall be sized as shown in the Equipment Schedules. Each refrigerator shall have a refrigerated base and a refrigerated upper display structure. The top of each refrigerator shall be constructed of 16 gauge stainless steel.

The structure shall be 750 mm deep and shall be insulated with foamed-in-place polyurethane. Each display structure shall be supplied with 18 gauge stainless steel exterior sides. The front of each upper display structure shall be equipped with one tempered thermopane, self-closing, glass door. Each display shall have stainless steel back with 18 gauge stainless steel ends. Each refrigerated structure shall be equipped with four epoxy coated wire shelves. Each upper structure shall be equipped with a blower coil mounted in the bottom of the unit.

Each display refrigerator shall be equipped with a manufacturer's standard equipment. Specifications are based on True Food Service Equipment, Inc. Model #GDM-26.

4.136 ITEM NO. 121 - ELECTRONIC MENU BOARDS

Electronic Menu Boards shall be specified in Specifications Section 10440 - INTERIOR SIGNAGE, and shown on 1/AD02 Floor Plan.

4.137 ITEM NO. 122 - SANDWICH DISPLAY WARMERS

Contractor furnished, contractor installed. Sandwich display warmers shall be a dual shelf horizontal model sized as shown in the Equipment Schedules. Display warmers should be constructed of stainless steel and have tempered glass end panels. Incondenscent light shall illuminate the holding area. Each display warmer shall be wired 120-60-1 phase and shall be equipped with a cord and NEMA #5-15P plug. Specifications are based on Hatco Model #GRSDH-41D.

4.138 ITEM NO. 123 - PIZZA WARMERS

Government furnished, government installed.

4.139 ITEM NO. 124 - CHEESE WARMERS

Government furnished, government installed.

4.140 ITEM NO. 125 - NACHOS WARMERS

Government furnished, government installed.

4.141 ITEM NO. 126 - HOT DOG STATIONS W/ WARMERS

Government furnished, government installed.

4.142 ITEM NO. 127 - DONUT/PASTRY DISPLAYS

Government furnished, government installed.

4.143 ITEM NO. 128 - COUNTERS

Contractor furnished, contractor installed. Counters shall be custom fabricated in the shape and arrangement as shown in Equipment Schedules, Plans, and Details

Base of counters shall be constructed of 18 gauge stainless steel and shall be enclosed on all sides except the working side. Interior of counter front shall have frame work to support the tray slides specified under Item #100. The working side of the counters shall have a full length 178 mm deep apron just below the top. The interior of the base shall have a full length 18 gauge stainless steel undershelf measuring 610 mm front to back. Sides of undershelf shall be formed up 38 mm square and shall be tack welded and sealed to the body. The rear edge of undershelf shall be formed up 152 mm high and tightly hemmed. Counters shall be mounted on 152 mm high, 41 mm diameter stainless steel legs with adjustable stainless steel feet. Counters shall otherwise be constructed in accordance with Section of the specifications.

4.144 ITEM NO. 129 - COUNTERS

Contractor furnished, contractor installed. Counters shall be custom fabricated in the size, shape and arrangement as shown in Equipment Schedules, Plans, and Details. The tops shall be constructed of 14 gauge stainless steel with a 51 mm square turn down edge on all sides.

Base of counters shall be constructed of 18 gauge stainless steel and shall be enclosed on all sides except the working side. Interior of counter front s shall have frame work to support the tray slides specified under Item #129a. The working side of the counters shall have a full length 178 mm deep apron just below the top. The interior of the base shall have a full length 18 gauge stainless steel undershelf measuring 610 mm front to back. Sides of undershelf shall be formed up 38 mm square and shall be tack welded and sealed to the body. The rear edge of undershelf shall be formed up 152 mm high and tightly hemmed. Counters shall be mounted on 152 mm high, 41 mm diameter stainless steel legs with adjustable stainless steel feet. Counters shall otherwise be constructed in accordance with Section 2 of the specifications.

4.145 ITEM NO. 129a - TRAY SLIDES

Contractor furnished, contractor installed. Tray slides shall be custom fabricated in the size, shape and arrangement as shown on Equipment Schedule, Plans, and Details. Tray slides shall accommodate 356 mm by 457 mm trays. The tray slides shall be constructed of 2.0 mm stainless steel and shall be formed in the configuration shown on plan. The front vertical edge of the tray slides shall be highlighted to a #7 finish. The rear edge of the tray slides shall be formed up under the turned down edge of the top. The joint between the tops and tray slides shall be tight and shall be neatly sealed the full length. The ends of the tray slides shall be mitered as shown on the plan and details. The ends of the tray slides shall be welded closed. The tray slides shall be mounted to the body of the counter with 152 mm high 2.0 mm stainless steel brackets spaced 914 mm on center. Brackets shall be secured to the tray slide and counter base. Tray slides shall otherwise be constructed in accordance with Section 2 of the specifications.

4.146 ITEM NO. 130 - NOT USED

4.147 ITEM NO. 131 - NOT USED

4.148 ITEM NO. 132 - EXHAUST HOODS

Contractor furnished, contractor installed. Exhaust hoods shall be a factory built island style condensate ventilator. Hoods shall be an

exhaust only, Type II unit designed specifically for removal of moisture laden air in non-grease applications. Exhaust hoods shall measure 3600 mm by 1200 mm by 900 mm high. The bottom of the hoods shall be at 2100 mm above the finished floor. Exhaust hoods shall be constructed in accordance with the latest requirements of NFPA Bulletin #96 and shall be fabricated according to the National Sanitation Foundation Standard #2 and shall bear the NSF seal. The exhaust hoods shall be constructed of 18 gauge type 304 stainless steel with a #4 finish. All exposed welds shall be ground smooth and polished to the original finish of the metal. Internal seams shall be filled with NSF approved non-hardening sealer. Hoods shall include a full length removable condensate baffle constructed of 18 gauge type 304 stainless steel. Baffle shall be pitched to drain into a full perimeter welded condensate collecting gutter with a 25 mm N.P.T. stainless steel drain fitting at the left rear corner. Drain line shall be extended from the hood to the floor sink below. Welded in the top of hood shall be two exhaust duct collars sized as shown on the mechanical drawings. The duct collar shall be equipped with two 1220 mm long by 248 mm wide by 150 mm high fluorescent light fixtures. Each light fixture shall be specifically designed for exhaust hood installations with waterproof, heatproof and greaseproof construction. All exposed trim shall be stainless steel and the lens shall be shockproof tempered glass prismatic diffusers. Each fixture shall be equipped with vaporproof conduit hubs and all silicone heatproof gasketing. Each fixture shall be equipped with two fluorescent bulbs. The light switch shall be mounted in the face of the hoods with concealed wiring to the light fixtures. Specifications are based on Standard Keil Model #2111-1420-1000 fixtures.

Hoods shall be furnished with necessary hanger rods and brackets to secure these condensate hoods to the building structure above. Hoods shall be supplied with stainless steel closure channels as required to close the gap between the top of the exhaust hoods and the finished ceiling. Specifications are based on a Gaylord Model #VH-1 island style condensate hood.

4.149 ITEM NO. 133 - HOT FOOD MODULES

Contractor furnished, contractor installed. Hot food modules shall house 3-Well hot food modules with closure panels, two Stainless Steel Tray Slides, Buffet Canopy (heated and lighted) with Breath Guards and three infrared bulbs, hidden swivel casters with brakes, access panels and side skirts, self-locking and self-alining. Module material shall be of flame retardant ABS formed plastic fastened to galvaneal steel under-carriage 14 ga. 300 series stainless steel. Top shall be seamless, 14 ga. 300 series stainless steel with a #4 finish. Module body shall be black pearl, with decorative insert panels of brushed stainless finish. Specifications are based on a Galley Line, Model #9031, Heated Module with manufacturer's options and accessories as listed above.

4.150 ITEM NO. 134 - COLD FOOD MODULES

Contractor furnished, contractor installed. Cold food modules shall house 254mm (10") deep refrigerated pan with Form Fit Poly tap, two Stainless Steel Tray Slides, two Food Pan Adapter Bars, Buffet Canopy (lighted) with Breath Guards and flourescent bulb, hidden swivel casters with brakes, access panels and side skirts, self-locking and self-aligning, male/female flat-end panel for end next to wall. Module material shall be of flame retardant ABS formed plastic fastened to galvaneal steel under-carriage 14 ga. 300 series stainless steel. Top shall be seamless, 14 ga. 300 series stainless steel with a #4 finish. Module body shall be black pearl, with

decorative insert panels of brushed stainless finish. Specifications are based on a Galley Line, Model #9231, Refrigerated Salad Module with manufacturer's options and accessories as listed above.

4.151 ITEM NO. 135 - COMBI OVEN

Contractor furnished, contractor installed. Unit shall be gas fired, 20 level full size combination oven with stainless steel exterior, Casters. Welded stainless steel door with mounted outer glass and floating inner glass is "cool to the touch", stainless steel cooking chamber has large radius coved corners. Radius Plus power burner located in oven chamber. Stainless steel steam generator with deliming port and stainless steel atmospheric burner, 77.6 K.W. total input. Electronic Ignition. programmable controls accommodate up to 75 programs with 5 different cooking phases. Digital time and temperature display insludes "Cook and Hold" feature with meat probe, two speed fan motor and two speed power input. Times from 1 minute to 99 hours. Hi- limit thermostat. Variable humidity control when used in combi mode. Exhaust vent located in cooking chamber. Removable fat filter. Built-in diagnostics system. Stainless steel trolley. Pan capacity: (20) 18" x 26" x 1" bake pans, or (40) 13" x 18" x 1" bake pans or, or (40) 12" x 20" x 2 1/2" steam table pans. Ten wire racks. Plastic spray bottle. One year limited parts and labor warranty. 116/60/1 control circuit 3/4" gas connection, 3/4" water connection and 1 1/2" drain connection. Specifications are based on Vulcan Model VC20FGP, Gas Heated, 20 Level Full Size Combi Oven.

4.152 ITEM NO. 136 - WATER BOOSTER HEATER

Contractor furnished, contractor installed. The electric booster water heater shall supply 180 degree F (82 degree C) water for commercial use. The tank shall be designed for a working pressure of 1034 kPa (150 psi) and include a Hatco Castone lining with a 10 year warranty. The heater shall be complete with all internal plumbing, including 3/4" NPT pipe and fittings for inlet and outlet. All controls shall be built-in, including contactors and prewired in accordance with UL #1453 and NEC 422-27. Proper surface mounting circuit breaker or fused disconnect switch shall be provided by electrical contractor. Electrical heating elements shall be metal sheathed, controlled by close tolerance immersion thermostats. The booster shall be protected with high temperature limit switch (ECO) and low water cut-off. The heater shall consist of stainless steel body, base, and stainless steel adjustable legs. The heater shall include a temperature/pressure relief valve, high temperature pressure reducing valve with bypass, indicating temperature/pressure gauges and shock absorber. Unit shall have a built-in heat trap and fiberglass insulation to minimize heat loss. Service area shall be accessible from the front. Water Temperature recovery shall be 452 gph (1711 lph) for 40 degrees F (22 degrees C) Rise, and 258 gph (977 lph) for 70 degrees F (39 degrees C) Rise. Specifications are based on Hatco Corporation, Imperial Model S-45 plus options and accessories as listed above.

4.153 ITEM NO. C1 - HAND SINK, w/ SOAP/TOWEL DISP.

Contractor furnished, contractor installed. Stainless steel hand sink with soap and towel dispensor shall be the same as that specified for Item #48.

4.154 ITEM NO. C2 - SHELVING, MOBILE

Government furnished, government installed.

4.155 ITEM NO. C3 NOT USED

4.156 ITEM NO. C4 - HEATED CABINET, REACH-IN

Contractor furnished, contractor installed. Heated cabinet shall be a one section reach-in unit with 0.64 m^3 capacity constructed. Heated cabinet shall have a single temperature control adjustable up to 82 degrees C and a safety thermostat to shut heater element off if primary temperature control fails. Cabinet shall have a forced air heater assembly with a constant circulating fan and adjustable humidity control. Heated cabinet shall be sized as shown in Equipment Schedules. Heated cabinet shall have stainless steel interior and exterior with a #4 finish and shall be mounted on 152 mm high casters. Heated cabinet shall have half height doors, hinged as shown on the plan. Doors shall have single or double padlock ports and plates as required. The heated cabinet shall be wired 120-60-1 phase. Interior of heated cabinet shall be fitted with 16 pairs of universal pan file slides to hold either one 460 mm by 660 mm pan or two 305 mm by 510 mm pans per slide. Slides shall be stainless steel and shall be adjustable on 25 mm centers. Specifications are based on Halo Heat Model #1000-VP/US1 heated cabinet.

4.157 ITEM NO. C5 - WALL SHELF

Contractor furnished, contractor installed. Wall shelves shall each be in the size, shape and arrangement as shown on the Equipment Schedules. Each shelf shall be constructed of 1.3 mm stainless steel with the front rolled down 38 mm and the rear and ends formed up 25 mm. Each shelf shall be mounted to the wall 1829 mm above the finished floor. Specifications are based on Duke Model #MSD2424.

4.158 ITEM NO. C6 - CONVEYOR TOASTER

Government furnished, government installed.

4.159 ITEM NO. C7 - COUNTER

Contractor furnished, contractor installed. Counter shall be custom fabricated in the size, shape and arrangement as shown in the Equipment Schedules, Plans, and Details. The entire top shall be constructed of one piece 2.0 mm stainless steel with the front edge formed down approximately 75 mm to match the depth. The rear and each end of the top shall be formed down 75 mm square. The entire top shall be mounted to a stainless steel open tube base with an undershelf. The table shall be mounted on casters, with the two casters on the left end fitted with brakes. This counter shall otherwise be constructed in accordance with Part 2 of these specifications.

4.160 ITEM NO. C8 - COUNTER

Contractor furnished, contractor installed. Counter shall be custom fabricated in the size, shape and arrangement as shown in the Equipment Schedules, Plans, and Details. The entire top shall be constructed of one piece 2.0 mm stainless steel with the front edge formed down approximately 75 mm to match the depth and contour of the front edge of the sandwich refrigerator. The rear and each end of the top shall be formed down 75 mm square. The entire top shall be mounted to a stainless steel open tube base with an undershelf as detailed. The counter shall be mounted on casters, with the two casters on the right end fitted with brakes. This

counter shall otherwise be constructed in accordance with Part 2 of these specifications.

4.161 ITEM NO. C9 - FOOD WARMER

Contractor furnished, contractor installed. Food warmer shall be a portable food warmer as shown in Equipment Schedules. Food warmer shall be constructed of stainless steel and aluminum. Food warmer shall be wired 120-60-1 phase and shall have an 1800 mm electrical cord and plug. Food warmer shall have incandescent lights above the shelf and heat cable below the shelf. Food warmer shall have infinite controls for the heat and an/off light switch. Specifications are based on a Hatco Model #GR-FFBL food warmer.

4.162 ITEM NO. C10 - EXHAUST HOOD

Contractor furnished, contractor installed. Exhaust hood shall be constructed by the same manufacturer as Item #39. Hood shall be a high velocity water wash ventilator constructed in compliance with NFPA #96, BOCA, ICBO (Uniform Mechanical Code), SSBC and ACGIH (American Conference of Governmental Industrial Hygienists). The exhaust hood shall be U.L. listed and NSF approved. Exhaust hood shall be constructed in the size, shape, and arrangement shown on drawing and equipment schedule, measuring overall approximately 2250 mm long by 1050 mm wide by 900 mm high. Exhaust hood shall be installed with the bottom edge at 2100 mm above the floor. Exhaust hood shall be complete with high velocity grease extractors, plenum fire-dampers, duct collars, make-up air plenum, hanger brackets, auto wash control panel, piping, and nozzles. The drain outlet shall be located in the right rear corner of the hood and a stainless steel drain line shall be extended down and over to the floor sink below.

Exhaust hood shall be constructed entirely of 1.3 mm type #304 stainless steel with a #4 finish. All external seams and joints shall be welded liquid tight with all exposed welds ground smooth and polished back to original finish. Exhaust hood shall be furnished with all necessary hanger rods and shall be suspended from building structure above and secured to building wall at rear. Hood shall be supplied with stainless steel closure channels on front and sides as required to close the gap between the top of the exhaust hood and the finished ceiling.

Hood shall have the same extractor chamber, duct collars, fire dampers, thermostats, and make-up air plenum as specified for Item #39. Hood shall have fluorescent lights as specified for Item #39, extending the full length of hood. Hood shall have a separate wash control panel flush mounted in the wall in the carry out storage area as shown on plan. The hood shall otherwise be in accordance with the manufacturer's standard specifications. Specifications are based on an Avtec Model #AWWP exhaust hood.

4.163 ITEM NO. C11 - FIRE SUPPRESSION SYSTEM

Contractor furnished, contractor installed. Exhaust hood, Item #C10, shall be furnished with a separate liquid agent fire suppression system which shall be mounted on the wall near the ceiling in the carry out storage area as shown on plan. No conduit or piping shall be exposed to view. Fire suppression system shall be a U.L. listed liquid agent, cartridge operated, regulated pressure system with a fixed nozzle agent distribution network. The system shall be capable of automatic detection and actuation with local or remote manual actuation. Fire suppression system shall be provided with

a remote manual pull station recessed in the wall in location shown on plan. The fire suppression system shall be factory piped and complete with all necessary surface protection nozzles as required by Code. The system shall be properly sized for the nozzles required. The extinguishing agent shall be a potassium carbonate, potassium acetate-based formulation designed for flame knock down and securement of grease related fires. The regulated release mechanism shall be a spring loaded mechanical/pneumatic type with a nitrogen cartridge for providing the expellant gas supply to the liquid agent tanks. The regulated release mechanism shall contain a factory installed regulator set at 690 kPa. The mechanism shall have a visual indicator of the cocked or fired position without having to open the enclosure. The fire suppression system shall have an automatic fusible link detection system. The fire suppression system shall also have a microswitch to allow the shut-off of all gas and electricity for the items below the exhaust hood. Shut-off devices shall be furnished and installed under other sections of the specifications. All exposed piping for the fire suppression system shall be chrome plated or accordance with the Underwriter's Laboratories Listing, NFPA 96 and NFPA 17 and shall conform to all local authorities having jurisdiction over this fire suppression system. Upon completion of the installation of the fire suppression system, a qualified fire suppression system installer shall inspect the system and certify in writing that the system meets all applicable Codes. Specifications are based on an Ansul Model #R-102 system.

4.164 ITEM NO. C12 - DEEP FAT FRYERS

Contractor furnished, contractor installed. Deep fat fryers shall be constructed of stainless steel and sized as shown in the Equipment Schedules. Fry pot shall be seamless, drawn from a single piece of 18 gauge stainless steel with a cooking oil capacity of 22 pounds. It is equipped with stainless steel electric elements spaced above the bottom of the vessel. This allows food particles to collect in the unheated cold zone, minimizing carbonization. The bottom of the pot has rounded corners sloping toward the front where it is equipped with a 25 mm, full port, Teflon, 1/4 turn drain valve. All components are highly polished for easy cleaning.

Splashdeck shall be made of 18 gauge stainless steel, slopes toward the fry pot. Vertical sides, 102 mm high, prevent boil over when foods are immersed.

Splashback shall be made of 20 gauge stainless steel, completely covering top and sides. The splashback is equipped with two horizontal stainless steel rods 8 mm in diameter designed to hold the fry baskets.

Cabinet shall be made of 18 USS gauge mild steel with an enamel finish, mounted on four 102 mm adjustable chrome plated legs. Cabinet presents a stainless steel front with a full width 22 gauge stainless steel door directly under a 22 gauge stainless control panel and an 18 gauge stainless steel canopy. (No additional space if required for door to open a full 90 degrees.)

Electric elements shall be highly polished stainless steel. The 10 x 10" TS Counter Model has 3 elements with a total input of 10.2 K.W. per hour rated at 208 volts.

Panel of indicating lights shall be (1) power on, (2) elements on, (3) up to frying temperature, (4) "high limit" has been activated.

Thermostat shall be close range, hydraulic type, accurate to plus/minus 1

degrees C from 121 degrees to 190 degrees C. Application of this thermostat is patented by Keating.

High limit control shall be manual, resettable type with dual contactors. The control has a safety "test" button on the control panel, and a "reset" button located in the cabinet.

Standard accessories shall be one pair chrome plated 4 mesh baskets, a chrome plated grid screen over elements, a goofer stick and a sample of Keating Klenzer and Sea Powder.

Special order options shall be (1) full size or specialty baskets, (2) side or rear drain, (3) thermostat seals, (4) portable filter.

Electric specifications shall be 3 terminal blocks, with ground provided for field wiring.Specifications based on Keating Model 10 X 11 TS Counter Model Electric.

4.165 ITEM NO. C13 - TOP/BOTTOM GRIDDLE

Contractor furnished, contractor installed. Clam shell type griddle shall be the same as specified for Item #69.

4.166 ITEM NO. C14 - HORIZONTAL REFRIGERATOR-FREEZER DRAWER

Contractor furnished, contractor installed. Horizontal refrigerator-freezer drawer shall be constructed of stainless steel and sized as shown in the Equipment Schedules. Ball bearing equipped drawer slides, tested at 200 pounds. The drawers shall have magnetic seals. Unit will include 102 mm leg frame accessory. Unit shall require 115 V. 60 Hz, single phase, 15 amp service. Specification based on American Wyott Corp., Model #HRF-2, with 102mm (4 inch) adjustable legs.

4.167 ITEM NO. C15 - MICROWAVE OVEN

Contractor furnished, contractor installed. Microwave oven shall have 1,100 watt output top energy feed. Microwave oven shall be sized as shown in the Equipment Schedules. Oven shall have 34 liters capacity and shall have interior cavity dimensions of 343 mm by 398 mm by 241 mm high. Microwave oven shall have a digital display control panel to the right of the door with single and multiple program pre-set timing methods, variable entry timing, five power levels and ten programming options. Microwave oven shall have ten numbered pad with two menus programmable on each pad. Oven shall have MENU, START, RESET and TIME ENTRY pads and DEFROST, HOLD, MED-HI, and MEDIUM power pads. Microwave oven shall have a stainless steel exterior with a hinged, see through oven door and lighted interior. Microwave oven shall be wired 120-60-1 phase and shall be furnished with an electrical cord with a NEMA #5-20P plug. Specifications are based on an Amana Model #RFS11MP2 microwave oven.

4.168 ITEM NO. C16 - COUNTER

Contractor furnished, contractor installed. Counter shall be custom fabricated in the size, shape and arrangement shown in the Equipment Schedules, Plans, and Details. Top shall be constructed of 2.0 mm stainless steel with a 38 mm turn down edge on the front. At the left end, the front edge shall be mitered on a 45 degree angle to fit the window opening. Each end of the counter and portions of the rear edge shall be formed up into a 200 mm high by 50 mm thick backsplash. The center portion

of the rear shall extend through the wall opening and shall be formed down 38 mm square on the customer side. Each end of this center portion shall be formed up 38 mm against the edge of the wall. Mounted to the top shall be a sneeze guard specified under Item #C20.

The top shall be mounted on a stainless steel open tube base with a full length 1.3 mm stainless steel undershelf. The customer side of the counter shall have a 1.3 mm stainless steel panel extending from the underside of the top down to the level of the top of the quarry tile base on the adjacent walls. Stainless steel panel shall be set back 50 mm from the edge of the top and shall be secured to the walls and the counter frame work. Serving counter shall otherwise be constructed in accordance with Section 2 of the specifications.

4.169 ITEM NO. C17 - REFRIGERATOR W/ OVERSHELF

Contractor furnished, contractor installed. (Sandwich) Refrigerator shall be sized as shown in the Equipment Schedule. Top shall be constructed of one-piece 1.6 mm stainless steel with an integral sloped nosing on the front and a 150 mm high backsplash on the rear. The ends and rear side of the backsplash shall be welded closed. Top shall have a die-stamped raised rim opening with a 1.0 mm stainless steel removable hinged lid. Top shall have 75 mm of high density insulation. Top shall have a full length 1.6y mm stainless steel over shelf. Top of over shelf shall be 1270 mm above the floor and shall be mounted on brackets with stainless steel tube supports welded to the top of the backsplash.

Exterior of sandwich refrigerator shall have stainless steel front, each end and finished rear. Unit shall be mounted on four 152 mm high adjustable legs. Cabinet interior shall have stainless steel back and bottom. Interior ends and door frame shall be formed of ABS material. Base back, ends, and bottom shall be insulated with 50 mm foamed in place polyurethane. Door shall be constructed with an ABS interior liner and 0.8 mm die stamped stainless steel exterior front. Unit shall have one only epoxy coated wire shelf behind the door.

Sandwich refrigerator shall be wired 120-60-1 phase and shall have a 2134 mm long electrical cord with a NEMA #5-15P plug. Sandwich refrigerator shall have a .15 K.W. condensing unit. refrigeration system shall maintain 2 degrees to 4 degrees C interior cabinet temperature. The evaporator shall be lowered as required to accommodate 150 mm deep pans inserted in the top opening. Evaporator housing shall enclose refrigeration lines, evaporator coil, expansion valve and fans. Sandwich refrigerator shall be supplied with a one year refrigeration service policy. This refrigerated base shall otherwise be in accordance with this manufacturer's standard specifications. Specifications are based on True Model #SSU-27-8 Sandwich/Salad Unit.

4.170 ITEM NO. C17a - SERVING UNIT, HEATED (2-WELLS)

Contractor furnished, contractor installed. Mobile heating units shall be sized as shown in Equipment Schedules. Food wells shall have welded stainless steel construction and measure 305 mm wide by 508 mm long by 152 mm deep. Hot food warmer shall be wired 208-60-1 phase and shall have a 900 watt heating element. Unit shall have a recessed mounted control panel. Frame shall have 127 mm diameter casters bolted to frame. Unit shall be provided with standard base module. Specifications based on Carter Hoffmann Corp. Model #CC232.

4.171 ITEM NO. C18 - COUNTER

Contractor furnished, contractor installed. Counter shall be custom fabricated in the size, shape and arrangement shown in the Equipment Schedules, Plans, and Details. Top shall be constructed of 2.0 mm stainless steel with a 38 mm turn down edge on the front. At the left end, the front edge shall be mitered on a 45 degree angle to fit the window opening. Each end of the counter and portions of the rear edge shall be formed up into a 200 mm high by 50 mm thick backsplash. The center portion of the rear shall extend through the wall opening and shall be formed down 38 mm square on the customer side. Each end of this center portion shall be formed up 38 mm against the edge of the wall. An opening shall be provided in the top for a hot food unit specified under Item #C18. Mounted to the top shall be a sneeze guard specified under Item #C20.

The top shall be mounted on a stainless steel open tube base with a full length 1.3 mm stainless steel undershelf. The customer side of the counter shall have a 1.3 mm stainless steel panel extending from the underside of the top down to the level of the top of the quarry tile base on the adjacent walls. Stainless steel panel shall be set back 50 mm from the edge of the top and shall be secured to the walls and the counter frame work. Serving counter shall otherwise be constructed in accordance with Section 2 of the specifications.

4.172 ITEM NO. C19 - HOT DOG ROLLER GRILL

Contractor furnished, contractor installed. Hot dog roller grill shall have a capacity of 27 hot dogs and be sized as shown in the Equipment Schedules. Grill shall have 10 non-stick coated rollers with a tubular metal incolloy sheath heating element inside each. Rollers shall rotate 360 degrees by means of dual heavy duty motors. Grill shall have two individual controls for front and rear sets of rollers with three heat settings. Hot dog grill shall have stainless construction and shall have a removable grease drip pan 57 mm below the rollers. Grill shall be wired 120-60-1 phase and shall have an 1800 mm long electrical cord and NEMA #5-15P plug. Mounted to the top of the grill shall be a half cover sneeze guard constructed of heavy gauge injection molded clear Lexan. Hot dog grill shall be furnished with all standard equipment and shall be in accordance with the manufacturer's standard specifications. Specifications are based on a Star Model #25S with a Model #25SG sneeze guard.

4.173 ITEM NO. 20 - BREATH PROTECTOR, LIGHTED

Contractor furnished, contractor installed. Breath protector shall be mounted to the top of the counters Items #C16 and #C18, as shown on the plan. Breath protector shall be the same as specified for Item #66a. A light switch and concealed wiring shall be provided on the breath protector.

4.174 ITEM NO. 21 - TRAY DISPENSER

Government furnished, government installed.

4.175 ITEM NO. 22 - DISPLAY REFRIGERATOR

Contractor furnished, contractor installed. Display refrigerators shall each be a self contained air cooled unit wired 120-60-1 phase with a .5 K.W. compressor complete with cord and NEMA #5-20P plug. Each refrigerator be sized as shown in the Equipment Schedules. Each refrigerator shall have a refrigerated upper display structure. The top of each refrigerator shall

be constructed of 1.6 mm stainless steel with a 76 mm deep sloped nosing on front. The exterior sides of each base shall be equipped with finished 1.3 mm stainless steel panels. Each base shall have 50 mm foamed-in-place polyurethane.

The upper refrigerated structure shall be 762 mm deep and shall be insulated with foamed-in-place polyurethane. Each upper display structure shall be supplied with 1.3 mm stainless steel exterior sides. The front of each upper display structure shall be equipped with two tempered thermopane, self-closing, glass doors. Interior of each upper display shall have stainless steel back with ABS material ends. Each upper refrigerated structure shall be equipped with four epoxy coated wire shelves.

Display refrigerator shall be mounted on C27. Each display refrigerator shall be equipped with the manufacturer's standard equipment. Specifications are based on Delfield Model #5248-S drop-in refrigerators.

4.176 ITEM NO. C23 - CUP/LID DISPENSER

Contractor furnished, contractor installed. Each cup/lid dispenser shall consist of a stainless steel housing with four horizontally mounted disposable cup dispensing tubes and a removable plastic top for the storage of cup and drink accessory items such as lids, straws, stir sticks, sugar, cream and napkins. Dispensers shall be sized as shown in the Equipment Schedules. Cup dispensing tubes shall be adjustable to accommodate various size cut diameters. Each dispensing tube shall have a spring kit in the rear to keep the cups pushed forward. Cups shall be loaded from the front. Size of dispensing tubes and calibration of springs shall be coordinated with the type of disposable cups furnished by the government. Specifications are based on SerVend Model #CD4A-T cup/lid dispensers.

4.177 ITEM NO. C24 - ICE DISPENSER

Contractor furnished, contractor installed. Ice dispenser shall be stainless steel type 304 exterior and sized as shown in the Equipment Schedules with storage for 68 ky ice. Unit shall have fully insulated ice storage bin. Ice dispensing to result from a paddle wheel which lifts and agitates the ice. Machine to be provided with 2438 mm power cord and be wired 120-60-1 phase. Specifications based on SerVend International Model #M150 countertop ice dispenser.

4.178 ITEM NO. C24a - SODA DISPENSER

Government furnished, government installed.

4.179 ITEM NO. C25 - COFFEE URN

Contractor furnished, contractor installed. Coffee urn shall be a fully automatic electric heated dual wall insulated single tank coffee brewer and dispenser. Coffee urn shall be sized as shown in the Equipment Schedules. Coffee urn shall be constructed of 304, 18-8 stainless steel. Coffee urn shall have fresh water brewing in a closed chamber and brew up to 68 LPH. Coffee urn shall have automatic refill of water jacket, automatic coffee agitation and adjustable by-pass on spray arm and teflon coating on spray arm piston. Coffee urn shall have dial thermometer with marked brew zone and low water cut-off. Coffee urn shall be equipped with NSF covers and stainless steel brew basket with 25 filter papers. Coffee urn shall have a bottom drain valve with hose connection. Coffee urn shall be equipped with

coffee and water faucets with glass gauges. Coffee urn shall otherwise be equipped with the manufacturer's standard equipment. Specifications are based on American Beverage Systems Model #8116 space saver urn.

4.180 ITEM NO. C26 - CONDIMENT RACK

Contractor furnished, contractor installed. Condiment racks shall be the same as specified for Item #98.

4.181 ITEM NO. C27 - COUNTER w/ TROUGH

Contractor furnished, contractor installed. Counter shall be custom fabricated in the size, shape and arrangement shown in the Equipment Schedules, Plans, and Details. Top shall be constructed of 2.0 mm stainless steel with the front and right end edges formed down 38 mm square. The front edge of the counter shall be mitered on a 45 degree angle as shown on the plan. The rear and end edges shall be formed up into a 200 mm by 50 mm thick backsplash. The left end of table shall have opening for Item #C22 as required.

Integrally welded in counter top as shown on plan shall be a drip trough measuring 25 mm deep with length and width as detailed. Each trough shall be screed and pitched to 38 mm diameter chrome plated brass drain outlet located at the end nearest the floor drain. A 25 mm hard copper drain line shall be extended from each drain to the floor drain below. Top of each counter shall be adequately underbraced to support the weight of the beverage equipment. All openings required in the top for utility lines shall be die formed up and shall be sized to fit each line.

Top shall be mounted to a stainless steel open tube base. The base shall have a full length 1.3 mm stainless steel undershelf except for the area below Item #C22. The area at the right end shall be open to the floor to provide space for a 787 mm high CO^2 tank for Item #C24A, Soda Dispenser.

4.182 ITEM NO. C28 - COUNTER

Contractor furnished, contractor installed. Counter shall be custom fabricated in the size, shape and arrangement shown in the Equipment Schedules, Plans, and Details. Top shall be constructed of 2.0 mm stainless steel with all edges formed down 38 mm square. the top shall be underbraced adequately to support the countertop equipment without deflection. Any openings in the top required for utility lines shall be die-formed up and shall be sized to fit the line served.

Top shall be mounted to an enclosed 1.3 mm stainless steel base. The interior of the base shall have a full length 1.3 mm stainless steel undershelf measuring 610 mm front to back. Sides of undershelf shall be formed up 38 mm square and shall be tack welded and sealed to the body. The rear edge of undershelf shall be formed up 152 mm high and tightly hemmed. Edges of notch shall be formed down the same as the remainder of the front edge of the undershelf and completely finished. The front of the base shall have four equal size hinged louvered doors. Hinged doors shall be single pan construction with full height stainless steel piano hinges, stainless steel pulls and magnetic catches. Each door shall have a stamped louver pattern covering the entire face. Base shall be mounted on 152 mm high stainless steel legs with adjustable stainless steel feet. Condiment/wrap station shall be constructed in accordance with part 2 of the specifications.

4.183 ITEM NO. C29 - WALL SHELF

Contractor furnished, contractor installed. Wall shelves shall each be in the size, shape and arrangement as shown in the Equipment Schedules and Drawings. Each shelf shall be constructed of 1.3 mm stainless steel with the front rolled down 38 mm and the rear and ends formed up 25 mm. Each shelf shall be mounted to the wall 1829 mm above the finished floor. Specifications are based on Duke Model #MSD2424.

4.184 ITEM NO. C30 - REACH-IN REFRIGERATOR

Contractor furnished, contractor installed. Refrigerator shall be a two section reach-in unit with 1.37 m^3 capacity. Refrigerator shall be fitted with half height doors, sized, and hinged as shown in Equipment Schedules and on Plan. Refrigerator shall measure overall 147u3 mm long by 711 mm wide by 2108 mm high. The refrigerator shall have a stainless steel interior and exterior. The front frame shall be extruded thermal plastic providing a thermal break between the interior and exterior of the cabinet eliminating the need for anti-condensate heaters. No heater wires are acceptable. The interior liner shall be crimped construction with 10 mm radius bends for easy cleaning. The refrigerator shall have non CFC polyurethane foam insulation poured, expanded, and bonded in place completely filling all cavities between the inner and outer surfaces of cabinet and doors. The doors shall have heavy duty, cast aluminum, bumper type door handles positioned horizontally with cylinder lock and keys. Chrome plated door hinge mechanisms shall be spring loaded, cam lift design furnished with stops and mounted to reveal full door opening when door is opened past 90 degrees. All doors must be field rehingeable without drilling or defacing the cabinet. Doors shall have single or double padlock posts and plates as required. doors shall have interior door panels made of one piece ABS thermoplastic. The interior light shall have a shatterproof cover and shall be controlled by a door actuated switch. The vinyl door gaskets shall be easily replaceable without the use of tools. The refrigerator shall have an exterior digital thermometer. The refrigerator shall have 152 mm high stainless steel legs with stainless steel adjustable feet.

Refrigerator shall be self contained with a top mounted compressor wired 120-60-1 phase with 3048 mm cord and plug. The refrigeration system shall be complete with condensing fan and fan motor, removable insulated coil housing, and temperature control. Defrosting shall be automatic. The refrigerant shall be metered through a capillary tube. No expansion valves shall be accepted. Refrigerator shall have a high staring torque 0.25 K.W. compressor rated at 2,600 BTU at 32 degrees C ambient temperature. The evaporator shall be oversized to operate at -7 degrees C temperature and maintain 80 percent relative humidity. the condenser shall have a heavy duty one piece all aluminum skived fin design to match the motor-compressor rating. No plumbing connections shall be required. The condensate water shall be automatically evaporated from the top of the cabinet. No energy consuming heaters or electrically operated devices are acceptable. The refrigerator shall be furnished with a one year refrigeration service policy on a local level.

Refrigerator shall be equipped with ten only stainless steel wire shelves. Shelves shall be adjustable on 25 mm centers. Specifications are based on Traulsen Model #RHT 2-26 W UT (Stainless Steel).

4.185 ITEM NO. C31 - REACH-IN FREEZER

Contractor furnished, contractor installed. Freezer shall be a two section reach-in unit with 1.37 m^3 capacity. Freezer shall be fitted with full height doors, hinged as shown on plan. The freezer shall be sized as shown in the Equipment Schedules. The freezer shall have a stainless steel interior and exterior. The front frame shall be extruded thermal plastic providing a thermal break between the interior and exterior of the cabinet with anti-condensate heaters. The interior liner shall be crimped construction with 10 mm radius bends for easy cleaning. The freezer shall have non CFC polyurethane foam insulation poured, expanded, and bonded in place completely filling all cavities between the inner and outer surfaces of cabinet and doors. The doors shall have heavy duty, cast aluminum, bumper type door handles positioned horizontally with cylinder lock and keys. chrome plated door hinge mechanisms shall be spring loaded, cam lift design furnished with stops and mounted to reveal full door opening when door is opened past 90 degrees. All doors must be field rehingeable without drilling or defacing the cabinet. Doors shall have single or double padlock posts and plates as required. Doors shall have interior door panels made of one piece ABS thermoplastic. The interior light shall have a shatterproof cover and shall be controlled by a door actuated switch. The vinyl door gaskets shall be easily replaceable without the use of tools. The freezer shall have an exterior digital thermometer. The freezer shall have 152 mm high stainless steel legs with stainless steel adjustable feet.

The freezer shall be self contained with a top mounted compressor wired 120-60-1 phase with 3048 mm cord and plug. The refrigeration system shall be complete with condensing fan and fan motor, removable insulated coil housing, and temperature control. Defrosting shall be automatic with a defrost clock for time actuation and termination. The defrost heaters shall have safety overload protector. The refrigerant shall be metered through a capillary tube. No expansion valves shall be accepted. The refrigerator shall have a high starting torque .56 K.W. compressor rated at 3,380 BTU at 32 degrees C ambient temperature. The refrigeration system shall use R404A refrigerant. The evaporator shall be oversized to operate at -23 degrees C temperature. The condenser shall have a heavy duty one piece all aluminum skived fin design to match the motor-compressor rating. No plumbing connections shall be required. The condensate water shall be automatically evaporated from the top of the cabinet. No energy consuming heaters or electrically operated devices are acceptable. The freezer shall be furnished with a one year refrigeration service policy on a local level.

Freezer shall be equipped with ten only stainless steel wire shelves. Shelves shall be adjustable on 25 mm centers. Specifications are based on a Traulsen Model #RLT2-32 W UT.

4.186 ITEM NO. C32 - TRAY SLIDE

Contractor furnished, contractor installed. Tray slides shall each be custom fabricated in the size, "L" shape and arrangement as shown in Equipment Schedules, Plans, and Details. Each tray slide shall be 3500 mm long on one leg and 3200 mm long on the other leg by 432 mm wide. The tray slides shall be constructed of 2.0 mm stainless steel and shall be formed in the configuration shown on plan. The front vertical edge of the tray slides shall be highlighted to a #7 finish. The rear edge of the tray slides shall be formed up under the turned down edge of the top. The joint between the top and tray slide shall be tight and shall be neatly sealed the full length. the corners and ends of the tray slides shall be mitered as shown on the plan and details. The ends of the tray slides shall be welded closed. The tray slides shall be mounted to the partial height wall

with 102 mm high 2.0 mm stainless steel brackets spaced 914 mm on center. Brackets shall be secured to the tray slide and counter base. The rear side of the partial height wall below the tray slides shall be covered with 1.3 mm stainless steel panels. Panels shall lap under the rear turn door edge of the tray slide and shall be secured with mastic in a concealed manner. Tray slides shall otherwise be constructed in accordance with Section 2 of the specifications.

4.187 ITEM NO. C33 - REACH-IN REFRIGERATOR

Contractor furnished, contractor installed. Refrigerator shall be a one section reach-in unit with 19.1 cu. ft. capacity. Refrigerator shall be fitted with half height doors, hinged as shown on plan. Refrigerator shall be sized as shown in Equipment Schedules. The refrigerator shall have a stainless steel interior and exterior. The front frame shall be extruded thermal plastic providing a thermal break between the interior and exterior of the cabinet eliminating the need for anti-condensate heaters. No heater wires are acceptable. The interior liner shall be crimped construction with 10 mm radius bends for easy cleaning. The refrigerator shall have non CFC polyurethane foam insulation poured, expanded, and bonded in place completely filling all cavities between the inner and outer surfaces of cabinet and doors. The doors shall have heavy duty, cast aluminum, bumper type door handles positioned horizontally with cylinder lock and keys. Chrome plated door hinge mechanisms shall be spring loaded, cam lift design furnished with stops and mounted to reveal full door opening when door is opened past 90 degrees. All doors must be field rehingeable without drilling or defacing the cabinet. Doors shall have single or double padlock posts and plates as required. Doors shall have interior doors panels made of one piece ABS thermoplastic. The interior light shall have a shatterproof cover and shall be controlled by a door actuated switch. The vinyl door gaskets shall be easily replaceable without the use of tools. The refrigerator shall have an exterior digital thermometer. The refrigerator shall have 152 mm high stainless steel legs with stainless steel adjustable feet.

Refrigerator shall be self contained with a top mounted compressor wired 120-60-1 phase with 3048 mm cord and plug. The refrigeration system shall be complete with condensing fan and fan motor, removable insulated coil housing,and temperature control. Defrosting shall be automatic. The refrigerant shall be metered through a capillary tube. No expansion valves shall be accepted. Refrigerator shall have a high starting torque .19 K.W. compressor rated at 2030 BTU at 32 degrees C ambient temperature. The evaporator shall be oversized to operate at -7 degrees C temperature and maintain 80 percent relative humidity. The condenser shall have a heavy duty one piece all aluminum skived fin design to match the motor-compressor rating. No plumbing connections shall be required. The condensate water shall be automatically evaporated from the top of the cabinet. No energy consuming heaters or electrically operated devices are acceptable. The refrigerator shall be furnished with a one year refrigeration service policy on a local level.

Refrigerator shall be fitted with ten only stainless steel wire shelves adjustable on 25 mm centers. Specifications are based on a Traulsen Model # RHT 1-26 W UT.

4.188 ITEM NO. C34 - CASHIER STATION

Government furnished, government installed.

4.189 ITEM NO. C35 - TRAY SLIDES

Contractor furnished, contractor installed. Tray slides shall be custom fabricated in the size, shape and arrangement as shown on plan. Tray slides shall accommodate 356 mm by 457 mm trays. Each tray slide shall be sized as shown in Equipment Schedules, Plans, and Details. The tray slides shall be constructed of 2.0 mm stainless steel and shall be formed in the configuration shown on plan. The front vertical edge of the tray slides shall be highlighted to a #7 finish. The rear edge of the tray slides shall be formed up under the turned down edge of the top. The joint between the tops and tray slides shall be tight and shall be neatly sealed the full length. The ends of the tray slides shall be mitered as shown on the plan and details. The ends of the tray slides shall be welded closed. The tray slides shall be mounted to the body of the counter Item #C28 with 152 mm high 2.0 mm stainless steel brackets spaced 914 mm on center. Brackets shall be secured to the tray slide and counter base. Tray slides shall otherwise be constructed in accordance with Section 2 of the specifications.

4.190 ITEM NO. C36 - PIZZA WARMER

Government furnished, government installed.

4.191 ITEM NO. C37 - PASTRY DISPLAY

Government furnished, government installed.

-- End of Section --

SECTION 13208

WIRE-WOUND CIRCULAR PRESTRESSED-CONCRETE INSULATED CHILLED WATER STORAGE TANK
09/99
AMENDMENT NO. 0004

PART 1 GENERAL

1.1 REFERENCES

The publications listed below form a part of this specification to the extent referenced. The publications are referred to within the text by the basic designation only.

AMERICAN CONCRETE INSTITUTE (ACI)

ACI 301	(1996) Structural Concrete
ACI 372	(2000) Design and Construction of Wire- and Strand-Wrapped Prestress Structures

AMERICAN SOCIETY FOR TESTING AND MATERIALS (ASTM)

ASTM A 227/A 227M	(1993) Steel Wire, Cold-Drawn for Mechanical Springs
ASTM A 416/A 416M	(1997) Steel Strand, Uncoated Seven-Wire for Prestressed Concrete
ASTM A 475	(1995) Zinc-Coated Steel Wire Strand
ASTM A 586	(1992) Zinc-Coated Parallel and Helical Steel Wire Structural Strand
ASTM A 603	(1994) Zinc-Coated Steel Structural Wire Rope
ASTM A 615/A 615M	(1996a) Deformed and Plain Billet-Steel Bars for Concrete Reinforcement
ASTM A 648	(1995) Steel Wire, Hard Drawn for Prestressing Concrete Pipe
ASTM A 653/A 653M	(1997) Steel Sheet, Zinc-Coated (Galvanized) or Zinc-Iron Alloy Coated (Galvannealed) by the Hot-Dip Process
ASTM A 821	(1993) Steel Wire, Hard Drawn for Prestressing Concrete Tanks

AMERICAN WATER WORKS ASSOCIATION (AWWA)

AWWA D110	(1995; Addendum 1996) Wire- and Strand-Wound, Circular- Prestressed Concrete Water Tanks

1.2 SYSTEM DESCRIPTION

This specification covers the design and performance requirements for the chilled water storage concrete water tank to be provided as a part of this contract. The tank shall be partially buried, pre-stressed, shotcrete concrete with sandwiched metal shell in accordance with the applicable requirements of AWWA D110, Type II or Type III, stratified chilled water storage system to provide a minimum of 24,600 KWH (7,000 ton-hours) of 5.6 degrees C. (42-degree F) water with a minimum storage capacity of 3,790,000 liters (1,000,000 U.S. gallons). The tank shall be furnished with an internal diffuser system for top and bottom inlet and outlet ports. The diffuser system shall be either a "single or double octagon as required to meet the Reynolds number criteria" or "radial" design capable of maintaining a thermocline (boundary) layer (at 125 percent of the specified flow rate) of a maximum thickness of 610 mm (2 feet) over an 18-hour period. The maximum inlet and outlet Reynolds number shall be 2,000. The design Froude number shall be 1. The design, fabrication, and erection of the tank shall be in accordance with the applicable requirements of AWWA D110 Type II or III and ACI 372, except as modified herein. No additional thickness for corrosion allowance will be required. The tank shall be designed for a 3 second gust wind speed of 145 kilometers per hour with a wind pressure of 1.44 kPa, importance factor II. The tank shall be designed for roof live load of 958 Pa (20 psf). The allowable soil bearing pressure design shall be as per structural drawing, and equivalent lateral earth pressure 13.73 kPa per meter of height of backfill. The range between high and low water levels will be approximately 300 mm (1 foot). During normal operation of the tank, the range for water level shall be 100mm (4-inch). The tank shall have such standard shell height and such diameter as will meet the requirements for the selected standard capacity and for the high water level specified above. The tank shall have a self-supporting umbrella roof, self-supporting dome roof, or ellipsoidal roof, as approved. The tank shall be insulated such that when charged with 5.6 degree C. (42-degree F.) water the temperature shall not rise by more than .56 degree C (1 degree F) over a 12-hour period at 32.2 degrees C. (90 degrees F.) ambient. Type of insulation and protective covering for the insulation shall be installed as per tank manufacturer recommendation with gorvernment approval.

The maximum Reynolds number above does not apply to "radial" type diffuser systems, however, suppliers of radial diffuser systems shall demonstrate the capability of the diffuser system design to meet a maximum thermocline boundary layer of 610 mm (2 feet) in an 18-hour period with an existing, operational chilled water storage facility. Certified test data shall be furnished from one or more of the supplier's previous customers that documents the ability to meet the above criteria. The data shall include temperature logs for a minimum of 24 sequential hours of operation (at or near peak operating conditions) with at least one charge and discharge cycle. Provide all pertinent data such as data collection methods, thermistor spacing, sketches, etc, in sufficient detail to prove the ability to meet the above performance requirements. This data shall be furnished along with data listed in paragraph Contractor Qualifications and Experience.

1.2.1 Hydraulic & Mechanical Design Conditions

The tank shall be designed to provide a minimum of 24,600 KWH (7,000 ton-hours) of cooling capacity under the following conditions:

a. Maximum tank charging flow rate = 217.2 L/S (3,442 gpm).

b. Maximum tank discharge flow rate = 217.2 L/S (3,442 gpm).

c. Maximum tank discharge water temperature = 5.6 degrees C. (42 degrees F).

d. Charging water temperature = 5.6 degrees C. (42 degrees F).

e. Return water temperature = 12.2 degrees C. (54 degrees F).

f. Maximum pressure drop through the tank from the inlet flange to the outlet flange = 34.5 Kpa (5 psi).

1.2.2 Contractor Qualifications and Experience

The Contractor shall demonstrate ability to perform under the requirements contained herein by providing qualifications and experience of personnel employed by the Contractor for the design and construction of the type and relative size of the chilled water storage system specified under this contract. The Contractor must have designed and constructed at least two chilled water storage systems that are currently operational. Provide data to substantiate the client (system owner/operator), system size, date of commissioning, and current status (operational or if not, reason for outage).

1.3 SUBMITTALS

Government approval is required for submittals with a "G" designation; submittals not having a "G" designation are for information only. When used, a designation following the "G" designation identifies the office that will review the submittal for the Government. The following shall be submitted in accordance with Section 01330 SUBMITTAL PROCEDURES:

SD-02 Shop Drawings

Concrete Water Tank; G, RE

AWWA D110 and ACI 372, design-construct requirements, stamped by a professional engineer.

Detail and erection drawings, before proceeding with any installation. The drawings shall be complete with details of all pipe and concrete work and with details of the assembling of all items required for the complete installation.

SD-05 Design Data

Design Calculations; G, RE

Six copies of the Design Calculations shall be provided in bound 216 x 279 mm (8 1/2 x 11 inch) booklets.

SD-06 Test Reports

Prestressing Process Records; G, RE
Leakage Testing; G, RE

Six copies of the reports shall be provided in bound 216 x 279 mm (8 1/2 x 11 inch) booklets. Reports shall document all phases

of tests performed during the Leakage Testing.

SD-10 Operation and Maintenance Data

Concrete Water Tank; G, RE

Six copies of operation and 6 copies of maintenance manuals for the equipment furnished. Operation manuals shall detail the step-by-step procedures required for equipment startup, operation, and shutdown. Operation manuals shall include the manufacturer's name, model number, parts list, and brief description of all equipment and their basic operating features. Maintenance manuals shall list routine maintenance procedures, possible breakdowns and repairs, and troubleshooting guides. Maintenance manuals shall include piping and equipment layout and simplified wiring and control diagrams of the equipment system as installed.

PART 2 PRODUCTS

2.1 CONCRETE

Section 03300 Cast-In-Place Structural Concrete.

2.1.1 Floor and Footings

Minimum 29 MPa 28 day strength.

2.1.2 Wall and Dome Roof

Minimum 29 MPa 28 day strength.

2.2 SHOTCRETE

Section 03371 Shotcrete. Minimum 31 MPa 28 day strength or wall strength if greater.

2.2.1 Wire Coat

Provide shotcrete consisting of not more than three parts sand to one part portland cement by volume.

2.2.2 Additional Coats

Provide shotcrete consisting of not more than four parts sand to one part Portland cement by volume.

2.3 CEMENT MORTAR

ACI 301. In cases where mortar is to be used to encase the waterstop, mortar shall consist of not more than three parts sand to one part portland cement by weight.

2.4 REINFORCING

Galvanize all steel reinforcing.

2.4.1 Nonprestressed Reinforcement

ACI 301 and ASTM A615, Grade 420 (60ksi).

2.4.1.1 Steel Sheet Diaphragms

AWWA D110, galvanized ASTM A 653/A 653M, Z275.

2.4.2 Prestressed Reinforcement

AWWA D110 and ACI 301. In addition, ASTM A 648, ASTM A 227/A 227M, or ASTM A 821.

2.5 ELASTOMERIC MATERIAL

AWWA D110 for waterstops, bearing pads, sealer, and seal coat.

2.6 TANK ACCESSORIES

All tank accessories internal to the tank shall be stainless steel, plastic (PVC), or fiberglass. Additional requirements for accessories are as follows:

2.6.1 Manholes and Pipe Connections

Number, type, location, and size of manholes and pipe connections will be as shown on the drawings. Provide as a minimum one man-way at the top outside edge 900 mm by 1200 mm (3 feet by 4 feet) accessible via the external ladder from outside and internal ladder from inside of the tank. [AM#0004]

2.6.2 Overflow

The overflow for the tank shall consist of a 150 mm (6 inch) diameter PVC schedule 40 internal stub overflow adequately supported. The stub overflow shall be fitted with a seize-resistance, antithermosiphon device approved by Factory Mutual.

2.6.3 Vent

Vent shall be bolted to the cover plate of the center manhole on the roof. Vent will be tank manufacturer's standard type mushroom vent with aluminum bird screen. Screening for vent shall ensures fail-safe operation in the event that screen frosts over and the bottom of the screen shall be sufficiently elevated for snow considerations in the area.

2.6.4 Ladders and Safety Devices

Ladders and safety devices shall be provided. Location of ladders shall be as shown on the drawings. In addition, roof platforms, roof ladder handrails, and other safety devices shall be provided as required by OSHA Regulations (29 CFR) Standard 1926.1053, sub part x. [AM#0004]

PART 3 EXECUTION

3.1 INSPECTION

Ensure elevations of floor and footing excavation are within one-tenth foot of the indicated elevations and that excavation slopes are uniform and free of loose debris. Follow inspection procedures in accordance with AWWA D110.

3.2 INSTALLATION

Follow construction procedures in accordance with AWWA D110, with restrictions specified herein.

a. Do not use curing compound except in conjunction with water curing.

b. AWWA D110, provide additional protection for reinforcing and prestressing strands for aggressive water conditions.

3.3 FIELD QUALITY CONTROL

a. Keep prestressing process records in accordance with AWWA D110.

b. Perform leakage testing in accordance with AWWA D110.

3.4 REPAIRS

3.4.1 Leakage Cracks

Make repairs by pressure epoxy grouting in accordance with AWWA D110. Retest.

3.4.2 Honeycombed Concrete

If allowed by QC Representative, remove defective concrete and replace with nonshrinking aggregate grout from Section 03300 Cast-In-Place Structural Concrete.

3.5 EXCAVATING, FILLING, AND GRADING

Excavating, filling, and grading shall conform to the applicable requirements of Section 02315 EXCAVATION, FILLING AND BACKFILLING FOR BUILDINGS.

3.6 BACKFILL

Section 02315 EXCAVATION, FILLING AND BACKFILLING FOR BUILDINGS for backfill requirements. Backfill after tank testing is successfully completed. Avoid unbalanced backfill placement.

3.7 PIPING INSTALLATION

Piping, valves and testing shall conform to applicable requirement of Section 15650 CENTRAL REFRIGERATED AIR-CONDITIONING SYSTEM.

-- End of Section --

SECTION 15569

WATER AND STEAM HEATING; OIL, GAS OR BOTH; UP TO 20 MBTUH

05/95

AMENDMENT NO. 0004

PART 1 GENERAL

1.1 REFERENCES

The publications listed below form a part of this specification to the extent referenced. The publications are referred to in the text by basic designation only.

AIR MOVEMENT AND CONTROL ASSOCIATION (AMCA)

AMCA 801	(1992) Industrial Process/Power Generation Fans: Specification Guidelines

AMERICAN NATIONAL STANDARDS INSTITUTE (ANSI)

ANSI Z21.13	(1991; Z21.13a; Z21.13b) Gas-Fired Low-Pressure Steam and Hot Water Boilers

AMERICAN SOCIETY FOR TESTING AND MATERIALS (ASTM)

ASTM A 47/A 47M	(1999) Ferritic Malleable Iron Castings
ASTM A 53/A 53M	(1999b) Pipe, Steel, Black and Hot-Dipped, Zinc-Coated, Welded and Seamless
ASTM A 105/A 105M	(1998) Carbon Steel Forgings, for Piping Applications
ASTM A 106	(1999el) Seamless Carbon Steel Pipe for High-Temperature Service
ASTM A 167	(1999) Stainless and Heat-Resisting Chromium-Nickel Steel Plate, Sheet, and Strip
ASTM A 183	(1983; R 1998) Carbon Steel Track Bolts and Nuts
ASTM A 193/A 193M	(1999a) Alloy-Steel and Stainless Steel Bolting Materials for High-Temperature Service
ASTM A 234/A 234M	(1999) Piping Fittings of Wrought Carbon Steel and Alloy Steel for Moderate and High Temperature Services
ASTM A 366/A 366M	(1997el) Steel, Sheet, Carbon, Cold-Rolled, Commercial Quality
ASTM A 515/A 515M	(1989; R 1997) Pressure Vessel Plates,

	Carbon Steel, for Intermediate- and Higher-Temperature Service
ASTM A 516/A 516M	(1990; R 1996) Pressure Vessel Plates, Carbon Steel, for Moderate- and Lower-Temperature Service
ASTM A 536	(1984; R 1999el) Ductile Iron Castings
ASTM A 653/A 653M	(1999a) Steel Sheet, Zinc-Coated (Galvanized) or Zinc-Iron Alloy-Coated (Galvannealed) by the Hot-Dip Process
ASTM B 32	(1996) Solder Metal
ASTM B 62	(1993) Composition Bronze or Ounce Metal Castings
ASTM B 75	(1999) Seamless Copper Tube
ASTM B 75M	(1999) Seamless Copper Tube (Metric)
ASTM B 88	(1999) Seamless Copper Water Tube
ASTM B 88M	(1999) Seamless Copper Water Tube (Metric)
ASTM B 813	(1993) Liquid and Paste Fluxes for Soldering Applications of Copper and Copper Alloy Tube
ASTM B 828	(1998) Making Capillary Joints by Soldering of Copper and Copper Alloy Tube and Fittings
ASTM C 27	(1998) Fireclay and High-Alumina Refractory Brick
ASTM C 34	(1996) Structural Clay Load-Bearing Wall Tile
ASTM C 155	(1997) Standard Classification of Insulating Firebrick
ASTM C 401	(1991; R 1995el) Alumina and Alumina Silicate Castable Refractories
ASTM D 596	(1991; R 1995) Reporting Results of Analysis of Water
ASTM D 1784	(1999a) Rigid Poly(Vinyl Chloride) (PVC) Compounds and Chlorinated Poly(Vinyl Chloride) (CPVC) Compounds
ASTM D 2000	(1999) Rubber Products in Automotive Applications
ASTM F 872	(1984; R 1990) Filter Units, Air Conditioning: Viscous-Impingement Type, Cleanable

ASTM F 876	(1999a) Crosslinked Polyethylene (PEX) Tubing
ASTM F 1097	(1991; R 1996) Mortar, Refractory (High-Temperature, Air-Setting)
ASTM F 1139	(1988; R 1998) Standard Specification for Steam Traps and Drains

ASME INTERNATIONAL (ASME)

ASME B1.20.1	(1983; R 1992) Pipe Threads, General Purpose (Inch)
ASME B16.3	(1998) Malleable Iron Threaded Fittings
ASME B16.4	(1998) Gray Iron Threaded Fittings
ASME B16.5	(1996; B16.5a) Pipe Flanges and Flanged Fittings NPS 1/2 thru NPS 24
ASME B16.9	(1993) Factory-Made Wrought Steel Buttwelding Fittings
ASME B16.11	(1996) Forged Fittings, Socket-Welding and Threaded
ASME B16.15	(1985; R 1994) Cast Bronze Threaded Fittings Classes 125 and 250
ASME B16.18	(1984; R 1994) Cast Copper Alloy Solder Joint Pressure Fittings
ASME B16.21	(1992) Nonmetallic Flat Gaskets for Pipe Flanges
ASME B16.22	(1995; B16.22a1998) Wrought Copper and Copper Alloy Solder Joint Pressure Fittings
ASME B16.26	(1988) Cast Copper Alloy Fittings for Flared Copper Tubes
ASME B16.34	(1997) Valves - Flanged, Threaded, and Welding End
ASME B16.39	(1998) Malleable Iron Threaded Pipe Unions Classes 150, 250, and 300
ASME B19.3	(1991; B19.3a; B19.3b) Safety Standard for Compressors for Process Industries
ASME B31.1	(1998) Power Piping
ASME B31.5	(1992; B31.5a1994) Refrigeration Piping
ASME B40.1	(1991) Gauges - Pressure Indicating Dial Type - Elastic Element

ASME BPV IV	(1998) Boiler and Pressure Vessel Code; Section IV, Heating Boilers
ASME BPV VIII Div 1	(1998) Boiler and Pressure Vessel Code; Section VIII, Pressure Vessels Division 1 - Basic Coverage
ASME BPV IX	(1998) Boiler and Pressure Vessel Code; Section IX, Welding and Brazing Qualifications
ASME CSD-1	(1998) Controls and Safety Devices for Automatically Fired Boilers
ASME PTC 10	(1997) Compressors and Exhausters

AMERICAN WATER WORKS ASSOCIATION (AWWA)

AWWA C606	(1997) Grooved and Shouldered Joints

AMERICAN WELDING SOCIETY (AWS)

AWS A5.8	(1992) Filler Metals for Brazing and Braze Welding
AWS B2.2	(1991) Brazing Procedure and Performance Qualification

COMMERCIAL ITEM DESCRIPTIONS (CID)

CID A-A-1419	(Rev D) Filter Element, Air Conditioning (Viscous-Impingement and Dry Types, Replaceable)

COPPER DEVELOPMENT ASSOCIATION (CDA)

CDA Tube Handbook	(1995) Copper Tube Handbook

EXPASION JOINT MANUFACTURERS ASSOCIATION (EJMA)

EJMA Stds	(1998; 7th Edition) EJMA Standards

HYDRONICS INSTITUTE DIVISION OF GAMA (HYI)

HYI-01	(1998) I=B=R Ratings for Boilers, Baseboard Radiation and Finned Tube (Commercial) Radiation
HYI-400	(1998) I=B=R Product Floor Heating

MANUFACTURERS STANDARDIZATION SOCIETY OF THE VALVE AND FITTINGS INDUSTRY (MSS)

MSS SP-25	(1998) Standard Marking System for Valves, Fittings, Flanges and Unions
MSS SP-58	(1993) Pipe Hangers and Supports - Materials, Design and Manufacture

MSS SP-69	(1996) Pipe Hangers and Supports - Selection and Application
MSS SP-70	(1998) Cast Iron Gate Valves, Flanged and Threaded Ends
MSS SP-71	(1997) Gray Iron Swing Check Valves, Flanges and Threaded Ends
MSS SP-72	(1999) Ball Valves with Flanged or Butt-Welding Ends for General Service
MSS SP-73	(1991; R 1996) Brazing Joints for Copper and Copper Alloy Pressure Fittings
MSS SP-78	(1998) Cast Iron Plug Valves, Flanged and Threaded Ends
MSS SP-80	(1997) Bronze Gate, Globe, Angle and Check Valves
MSS SP-85	(1994) Cast Iron Globe & Angle Valves, Flanged and Threaded Ends
MSS SP-110	(1996) Ball Valves Threaded, Socket Welding, Solder Joint, Grooved and Flared Ends

NATIONAL ELECTRICAL MANUFACTURERS ASSOCIATION (NEMA)

NEMA 250	(1997) Enclosures for Electrical Equipment (1000 Volts Maximum)

NATIONAL FIRE PROTECTION ASSOCIATION (NFPA)

NFPA 31	(1997 TIA 97-1) Installation of Oil Burning Equipment
NFPA 54	(1999) National Fuel Gas Code
NFPA 70	(1999) National Electrical Code
NFPA 211	(2000) Chimneys, Fireplaces, Vents, and Solid Fuel-Burning Appliances
NFPA 8501	(1997) Single Burner Boiler Operation

UNDERWRITERS LABORATORIES (UL)

UL 296	(1994; Rev Sep 1998) Oil Burners
UL 726	(1995; Rev thru Jan 1999) Oil-Fired Boiler Assemblies
UL 795	(1999) Commercial-Industrial Gas Heating Equipment
UL 1738	(1993; Rev thru Mar 1998) Venting Systems for Gas-Burning Appliances, Categories II,

III and IV

UL Gas&Oil Dir (1999) Gas and Oil Equipment Directory

1.2 SUBMITTALS

Government approval is required for submittals with a "G" designation; submittals not having a "G" designation are for information only. When used, a designation following the "G" designation identifies the office that will review the submittal for the Government. The following shall be submitted in accordance with Section 01330 SUBMITTAL PROCEDURES:

SD-02 Shop Drawings

Heating System;
Piping Installation;
Installation;

Detail drawings consisting of equipment layout including installation details and electrical connection diagrams; combustion and safety control diagrams; typical hanger details, gauge reinforcement, reinforcement spacing rigidity classification; and piping layout showing the location of guides and anchors, the load imposed on each support or anchor, and typical support details. Drawings shall include any information required to demonstrate that the system has been coordinated and will properly function as a unit and shall show equipment relationship to other parts of the work, including clearances required for operation and maintenance.

SD-03 Product Data

Manufacturer's Catalog Data; G, RE

Manufacturer's catalog data shall be included with the detail drawings for the following items:

Boilers
Fuel Burning Equipment
Combustion Control Equipment
Pumps
Fittings and Accessories
Water Treatment System

The data shall show model, size, options, etc., that are intended for consideration. Data submitted shall be adequate to demonstrate compliance with contract requirements.

Spare Parts Data;

Spare parts data for each different item of material and equipment, after approval of the detail drawings and no later than 2 months prior to the date of beneficial occupancy. The data shall include a complete list of parts and supplies, with current unit prices and source of supply, and a list of the parts recommended by the manufacturer to be replaced after 1 and 3 years of service.

Water Treatment Plan;
Boiler Water Treatment;

Six complete copies of the proposed water treatment plan. The plan shall include a layout, control scheme, a list of the existing water conditions including the items listed in paragraph BOILER WATER TREATMENT, a list of all chemicals, the proportion of chemicals to be added, the final treated water conditions, and a description of environmental concerns for handling the chemicals.

Heating System Tests;
Fuel System Tests;

Proposed test procedures for the heating system tests and fuel system tests, at least 2 weeks prior to the start of related testing.

Welding;

A copy of qualified welding procedures, at least 2 weeks prior to the start of welding operations.

Qualification;

A statement from the firms proposed to prepare submittals and perform installation and testing, demonstrating successful completion of similar services of at least five projects of similar size or scope, at least 2 weeks prior to the submittal of any other item required by this section.

Welding;

A list of names and identification symbols of qualified welders and welding operators, at least 2 weeks prior to the start of welding operations.

Field Instructions;

System layout diagrams that show the layout of equipment, piping, and ductwork and typed condensed operation manuals explaining preventative maintenance procedures, methods of checking the system for normal, safe operation, and procedures for safely starting and stopping the system, framed under glass or laminated plastic, at least 2 weeks prior to the start of related testing. After approval, these items shall be posted where directed.

Tests;

Proposed test schedules for the heating system and fuel system tests, at least 2 weeks prior to the start of related testing.

SD-06 Test Reports

Heating System Tests;
Fuel System Tests;

Test reports for the heating system tests and the fuel system test, upon completion of testing complete with results.

Water Treatment Tests;

a. The water quality test report shall identify the chemical composition of the boiler water. The report shall include a comparison of the condition of the boiler water with the manufacturer's recommended conditions. Any required corrective action shall be documented within the report.

b. A test report shall identify the condition of the boiler at the completion of 1 year of service. The report shall include a comparison of the condition of the boiler with the manufacturer's recommended operating conditions.

SD-07 Certificates

Bolts;

Written certification by the bolt manufacturer that the bolts furnished comply with the requirements of this specification. The certification shall include illustrations of product markings, the date of manufacture, and the number of each type of bolt to be furnished based on this certification.

Continuous Emissions Monitoring;

Written certification by the boiler manufacturer that each boiler furnished complies with Federal, state, and local regulations for emissions. The certification shall also include a description of applicable emission regulations. If any boiler is exempt from the emission regulations, the certification shall indicate the reason for the exemption.

SD-10 Operation and Maintenance Data

Heating System;

Six complete manuals listing step-by-step procedures required for system startup, operation, shutdown, and routine maintenance, at least 2 weeks prior to field training. The manuals shall include the manufacturer's name, model number, parts list, simplified wiring and control diagrams, troubleshooting guide, and recommended service organization (including address and telephone number) for each item of equipment. Each service organization shall be capable of providing 4 hour onsite response to a service call on an emergency basis.

Water Treatment System;

Six complete copies of operating and maintenance manuals for the step-by-step water treatment procedures, including procedures for testing the water quality.

1.3 GENERAL REQUIREMENTS

1.3.1 Standard Products

Materials and equipment shall be the standard products of a manufacturer regularly engaged in the manufacture of the products and shall essentially

duplicate items that have been in satisfactory use for at least 2 years prior to bid opening. Equipment shall be supported by a service organization that is, in the opinion of the Contracting Officer, reasonably convenient to the site.

1.3.2 Asbestos Prohibition

Asbestos and asbestos-containing products shall not be used.

1.3.3 Nameplates

Each major component of equipment shall have the manufacturer's name, address, type or style, model or serial number, and catalog number on a plate secured to the equipment. Each pressure vessel shall have an approved ASME stamp.

1.3.4 Equipment Guards

Belts, pulleys, chains, gears, couplings, projecting setscrews, keys, and other rotating parts exposed to personnel contact shall be fully enclosed or guarded in accordance with OSHA requirements. High temperature equipment and piping exposed to contact by personnel or where it creates a potential fire hazard shall be properly guarded or covered with insulation of a type specified.

1.3.5 Verification of Dimensions

The Contractor shall become familiar with details of the work, verify dimensions in the field, and shall advise the Contracting Officer of any discrepancy before performing any work or ordering any materials.

1.3.6 Welding

Boilers and piping shall be welded and brazed in accordance with qualified procedures using performance-qualified welders and welding operators. Procedures and welders shall be qualified in accordance with ASME BPV IX. Welding procedures qualified by others, and welders and welding operators qualified by another employer may be accepted as permitted by ASME B31.1. The Contracting Officer shall be notified 24 hours in advance of tests, and the tests shall be performed at the work site if practical. The welder or welding operator shall apply his assigned symbol near each weld he makes as a permanent record. Structural members shall be welded in accordance with Section 05090 WELDING, STRUCTURAL.

1.4 MANUFACTURER'S SERVICES

Services of a manufacturer's representative who is experienced in the installation, adjustment, and operation of the equipment specified shall be provided. The representative shall supervise the installing, adjusting, and testing of the equipment.

1.5 DELIVERY AND STORAGE

Equipment delivered and placed in storage shall be protected from the weather, humidity and temperature variations, dirt and dust, and other contaminants.

PART 2 PRODUCTS

2.1 BOILERS

Each boiler shall have the output capacity in kilowatts (kW) as indicated when fired with the specified fuels. The boiler shall be furnished complete with the gas burning equipment, boiler fittings and trim, automatic controls, forced draft fan, natural draft/atmospheric burner, electrical wiring, insulation, piping connections, and protective jacket. The boiler shall be completely assembled and tested at the manufacturer's plant. The boiler and its accessories shall be designed and installed to permit ready accessibility for operation, maintenance, and service. Boilers shall be designed, constructed, and equipped in accordance with ASME BPV IV. Each boiler shall be of the watertube type and designed for water service as specified herein. The boiler capacity shall be based on the ratings shown in HYI-01 or as certified by the American Boiler Manufacturers Association, or American Gas Association.

2.1.1 Watertube Boiler

Boiler shall be bent or flexible type of water tube boiler. Boiler shall be self-contained, packaged type, complete with all accessories, mounted on a structural steel base. The boiler heating surface area for bent or flexible tube boilers shall be at least 0.04 square meters per kW. Bent or flexible tube boilers shall be provided with single or multiple downcomers for circulation without the need for exterior pumping. The tubes for bent or flexible tube boilers shall be designed for replacement without requiring welding or rolling of tubes. Any special tools required for bent or flexible tube removal or installation shall be provided with the boiler. [AM#0004]

2.1.2 Hot Water Heating Boilers

The hot water heating boiler shall be capable of operating at the specified maximum continuous capacity without damage or deterioration to the boiler, its setting, firing equipment, or auxiliaries. The rated capacity shall be the capacity at which the boiler will operate continuously while maintaining at least the specified minimum efficiency. The boiler design conditions shall be as follows:

a. Boiler design pressure: 850 kPa.

b. Operating pressure at boiler outlet: 345 kPa.

c. Hot water temperature: 82 degrees C.

d. Temperature differential between boiler discharge and system return: 16 degrees C.

e. Water pressure drop: 35 kPa.

f. Outdoor ambient air temperature: 37 degrees C (max), -5 degrees C (min).

g. Site elevation: 300 m.

h. Boilers with a capacity less than 90 kW shall have an Annual Fuel Utilization Efficiency of at least 80 percent. Boilers with a capacity of greater than or equal to 90 kW shall have a combustion efficiency of at least 80 percent when fired at the maximum and

minimum ratings allowed by the controls.

2.2 FUEL BURNING EQUIPMENT

Boiler shall be designed to burn gas. Each boiler shall comply with Federal, state, and local emission regulations.

2.2.1 Burners

2.2.1.1 Gas Fired Burners and Controls

Burners shall be UL approved mechanical draft burners with all air necessary for combustion supplied by a blower where the operation is coordinated with the burner, or natural draft/atmospheric burners as indicated. Burner shall be provided complete with fuel supply system in conformance with ANSI Z21.13.

2.2.2 Draft Fans

Fans conforming to AMCA 801 forced-draft shall be furnished as an integral part of boiler design. Fans shall be centrifugal with backward-curved blades, radial-tip blades or axial flow type. Each fan shall be sized for output volume and static pressure rating sufficient for pressure losses, excess air requirements at the burner, leakages, temperature, and elevation corrections for worst ambient conditions, all at full combustion to meet net-rated output at normal firing conditions, plus an overall excess air volume of 10 percent against a 20 percent static overpressure. Noise levels for fans shall not exceed 85 decibels in any octave band at a .914 meters (3 foot) station. Forced draft fan bearings shall be air cooled.

2.2.2.1 Draft Fan Control

Forced-draft centrifugal fans shall have inlet vane controls. Inlet vanes shall be suitable for use with combustion control equipment. Axial propeller fans shall have variable propeller pitch control.

2.2.2.2 Draft Fan Drives

Fans shall be driven by electric motors. Electric motor shall be drip proof or totally enclosed nonventilated. Motor starter shall be magnetic across-the-line type with general purpose enclosure and shall be furnished with four auxiliary interlock contacts.

2.2.3 Draft Damper

Boilers shall be provided with manual or automatic dampers, draft hoods, or barometric dampers as recommended by the boiler manufacturer to maintain proper draft in the boiler. Draft damper shall be provided in a convenient and accessible location in the flue gas outlet from the boiler. Automatic damper shall be arranged for automatic operation by means of a damper regulator, furnace draft regulator, or damper motor.

2.3 COMBUSTION CONTROL EQUIPMENT

Combustion control equipment shall be provided as a system by a single manufacturer. Field installed automatic combustion control system shall be installed in accordance with the manufacturer's recommendations and under the direct supervision of a representative of the control manufacturer. The boiler water temperature shall be controlled by a water temperature

controller. The controller shall start or stop the burner as the water temperature falls below or rises above preset points. Controllers for each boiler shall be mounted on a separate, free standing panel adjacent to the boiler or for packaged boilers on the boiler supporting structure. Electrical control devices shall be rated at 120 volts and shall be connected as specified in Section 16415 ELECTRICAL WORK, INTERIOR.

2.3.1 Water Temperature Controller

The controller shall be of sturdy construction and shall be protected against dust and dampness. The thermostatic element shall be inserted in a separable socket installed in the upper part of the boiler near the water outlet. Fixed position (on-off) and three position (high-low-off) controller shall operate on a 5.56 degree C (10 degree F) differential over an adjustable temperature range of approximately 60 to 104.4 degrees C (140 to 220 degrees F).

2.3.2 Boiler Combustion Controls

Gas fired boiler units shall be provided with fixed rate (on-off) for gross outputs up to 200 kW (700,000 Btuh), three position (high-low-off) for gross output from 200 to 600 kW (700,000 to 2,000,000 Btuh), and high-low-off or modulating, for gross output from 600 to 12000 kW (2,000,000 to 4,000,000 Btuh).

2.3.3 Combustion Safety Controls and Equipment

Control systems and safety devices for automatically fired boilers shall conform to ASME CSD-1. Electrical combustion and safety controls shall be rated at 120 volts, single phase, 60 Hz and shall be connected as specified in Section 16415 ELECTRICAL WORK, INTERIOR. A 100 mm diameter alarm bell shall be provided and shall be located where indicated or directed. The alarm bell shall ring when the boiler is shut down by any safety control or interlock. Indicating lights shall be provided on the control panel. A red light shall indicate flame failure, and a green light shall indicate that the main fuel valve is open. The following shutdown conditions shall require a manual reset before the boiler can automatically recycle:

a. Flame failure.

b. Failure to establish pilot flame.

c. Failure to establish main flame.

d. Low-water cutoff.

e. High temperature cutoff.

2.3.3.1 Low-water Cutoff

Low-water cutoff shall be provided to stop the burner when the water level drops below a predetermined point. The cutoff shall consist of a float chamber with float, float switch, and drain valve. The float switch shall be mounted on the float chamber with a packless-type leakproof connection. The float mechanism and drain valve shall be constructed of a corrosion-resistant material. The low-water cutoff shall be furnished with approved fittings and installed according to ASME boiler code requirements. Low-water cutoff shall be provided with feedwater regulator. Regulator shall be an approved design sized for the application. A regulator shall

be provided for each boiler. The feeder shall be so arranged that water will be fed to the boiler automatically when the water level in the boiler drops below a preset point and will actuate the alarm bell when the water level reaches the low danger point. The boiler feeder shall be arranged so that the burner and forced-draft fan will stop whenever the water level drops below a preset danger point. The boiler feeder shall be constructed so that the feedwater valve and seat are isolated from the float chamber to prevent overheating of the feed water and precipitation of scale on either the valve or seat. Each float mechanism, valve, and seat shall be constructed of an approved, durable, corrosion-resistant steel alloy. Valve seats shall be removable and renewable. The regulator shall be equipped with a large, self-cleaning strainer. The drain valve on the regulator shall be the gate or other straight-through type.

2.3.3.2 Water Flow Interlock

Hot water boiler limit controls shall be provided to include protection for low boiler water flow and high boiler water temperature. The limit controls shall be interlocked with the combustion control system to effect boiler alarm and shutdown. The controls shall not allow boiler startup unless hot water flow is proven.

2.4 PUMPS

2.4.1 Boiler Circulating Pumps

Circulating pumps shall be in-line, non-overloading centrifugal type and have a capacity not less than indicated. Casing and bearing houseings shall be cast iron or cast steel. Shaft seal shall be constructed of corrosion-resistant alloy steel, sleeve bearings and glands of bronze designed to accommodate a mechanical seal, and the housing of close-grained cast iron. Pump seals shall be capable of withstanding 115 degrees C temperature without external cooling. The motor shall have sufficient power for the service required, shall be of a type approved by the manufacturer of the pump, shall be suitable for the available electric service, and shall conform to the requirements of paragraph ELECTRICAL EQUIPMENT. The circulating pump discharge header shall be provided with a pressure switch. Pressure switch unit shall be a self-contained snap action type to indicate fluid pressure. Switch shall be a SPDT with 120-volt, 15-ampere rating.

2.4.2 Hot Water Heating System Pumps

Pumps shall be closed-coupled, based-mounted non-overloading centrifugal type and have a capacity not less than indicated. The pump shaft shall be constructed of corrosion-resistant alloy steel, sleeve bearings and glands of bronze designed to accommodate a mechanical seal, and the housing of close-grained cast iron. Pump seals shall be capable of withstanding 115 degrees C temperature without external cooling. Impeller, impeller wearing rings, glands, casing-wear rings, and shaft sleeve shall be bronze or corrosion-resisting steel. Bearings shall be ball-type or roller-type, and shall be efficiently sealed or isolated to prevent loss of oil or entrance of dirt or water. Base mounted pump and motor shall be mounted on a common cast iron base having lipped edges and tapped drainage openings or mounted on a structural steel base with drip lip or drain pan and tapped drainage openings. Close-coupled pumps shall be provided with drip pockets and tapped drainage openings. Pump motors shall have ample capacity to prevent overloading with the pump operating at any point on its characteristic curve, and shall have splashproof type enclosure.

2.5 COLD WATER CONNECTIONS

Connections shall be provided which includes consecutively in line a strainer, backflow prevention device, and water pressure regulator in that order in the direction of the flow. The backflow prevention device shall be provided as indicated and in compliance with Section 15400, PLUMBING, GENERAL PURPOSE. Cold water fill connections shall be made to the water supply system as indicated. Necessary pipe, fittings, and valves required for water connections between the boiler and cold water main shall be provided as shown. The pressure regulating valve shall be of a type that will not stick or allow pressure to build up on the low side. The valve shall be set to maintain a terminal pressure of approximately,lately 35 kPa in excess of the static head on the system and shall operate within a 15 kPa tolerance regardless of cold water supply piping pressure and without objectionable noise under any condition of operation.

2.6 UNIT HEATERS

Heaters shall be as specified below, and shall have a heating capacity not in excess of 125 percent of the capacity indicated.

2.6.1 Propeller Fan Heaters

Heaters shall be designed for suspension and arranged for horizontal discharge of air as indicated. Casings shall be not less than 0.912 mm (20 gauge) black steel and finished with lacquer or enamel. Suitable stationary or rotating air deflectors shall be provided to assure proper air and heat penetration capacity at floor level based on established design temperature. Suspension from heating pipes will not be permitted.

2.6.2 Heating Elements

Heating coils and radiating fins shall be of suitable nonferrous alloy with threaded or brazed fittings at each end for connecting to external piping. The heating elements shall be free to expand or contract without developing leaks and shall be properly pitched for drainage. The elements shall be tested under a hydrostatic pressure of 1.38 MPa (200 psig) and a certified report of the test shall be submitted to the Contracting Officer. Coils shall be suitable for use with water up to 120 degrees C.

2.6.3 Motors

Motors shall be provided with NEMA 250 general purpose enclosure. Motors and motor controls shall otherwise be as specified in Section 16415 ELECTRICAL WORK, INTERIOR.

2.6.4 Motor Switches

Motors shall be provided with manual selection switches with "Off" and "Automatic" positions and shall be equipped with thermal overload protection.

2.6.5 Controls

Controls shall be provided as specified in Section 15951 DIRECT DIGITAL CONTROL FOR HVAC.

2.7 FITTINGS AND ACCESSORIES

Boiler fittings and accessories shall be installed with each boiler in accordance with ASME BPV IV, unless otherwise specified.

2.7.1 Breeching

Each boiler shall be connected to the stack or flue by breeching constructed of black steel sheets not less than 1.2 mm thick nor less than thickness of stack, whichever is larger. Plastic materials polyetherimide (PEI) and polyethersulfone (PES) are forbidden to be used for vent piping of combustion gases. The clear distance between any portion of the breeching surface and any combustible material shall not be less than that specified in NFPA 211. Joints and seams shall be securely fastened and made airtight. Suitable hinged and gasketed cleanouts shall be provided, which will permit cleaning the entire smoke connection without dismantling. Flexible-type expansion joints shall be provided as required and shall not require packing.

2.7.2 Stacks

Individual stub stacks shall extend minimum 1 m above the roof and 3.3 m away from walls. Stack section shall be sheet steel having a thickness of not less than 2.47 mm (0.0972 inch). Prefabricated double wall stacks system shall extend above the roof to the same height. The inner stack shall be 304 stainless steel or 316 stainless steel having a thickness of not less than 0.89 mm (0.035 inch). The outer stack shall be sheet steel having a thickness of not less than 0.635 mm (0.025 inch). A method of maintaining concentricity between the inner and outer stacks shall be incorporated. The joints between the stack sections shall be sealed to prevent flue gas leakage. A 7.92 mm (0.3125 inch) diameter hole shall be provided in the stack not greater than 150 mm from the furnace flue outlet for sampling of the exit gases. A method shall be provided to seal the hole to prevent exhaust gases from entering the boiler room when samples are not being taken. Each stack shall be provided complete with rain hoodabove the roof to the heights indicated.

2.7.3 Expansion Tank

The hot water pressurization system shall include a diaphragm-type expansion tank which will accommodate the expanded water of the system generated within the normal operating temperature range, limiting the pressure increase at all components in the system to the maximum allowable pressure at those components. The only air in the system shall be the permanent sealed-in air cushion contained in the diaphragm-type tank. The sizes shall be as indicated. The expansion tank shall be welded steel, constructed, tested, and stamped in accordance with ASME BPV VIII Div 1for a working pressure of 850 kPa (125 psi) and precharged to the minimum operating pressure. The tank's air chamber shall be fitted with an air charging valve and pressure gauge. The tank shall be supported by steel legs or bases for vertical installation or steel saddles for horizontal installations. All components shall be suitable for a maximum operating temperature of 115 degrees C (240 degrees F). Pre-charge pressure, and final operating temperature and pressure will be documented by the contractor and witnessed by the contracting officer's representative.

2.7.4 Air Separator

External air separation tank shall be steel, constructed, tested and stamped in accordance with ASME BPV VIII Div 1 for a working pressure of

850 kPa (125 psi). The capacity of the air separation tank indicated is minimum.

2.7.5 Gaskets

Gaskets shall be nonasbestos material in accordance with ASME B16.21, full face or self-centering type. The gaskets shall be of the spiral wound type with graphite filler material.

2.7.6 Steel Pipe and Fittings

2.7.6.1 Steel Pipe

Steel pipe shall be ASTM A 53/A 53M, Type E or S, Grade A or B, black steel, standard weight.

2.7.6.2 Steel Pipe Fittings

Fittings shall have the manufacturer's trademark affixed in accordance with MSS SP-25 so as to permanently identify the manufacturer.

2.7.6.3 Steel Flanges

Flanged fittings including flanges, bolts, nuts, bolt patterns, etc. shall be in accordance with ASME B16.5 class 150 and shall have the manufacturers trademark affixed in accordance with MSS SP-25. Flange material shall conform to ASTM A 105/A 105M. Flanges for high temperature water systems shall be serrated or raised-face type. Blind flange material shall conform to ASTM A 516/A 516M cold service and ASTM A 515/A 515M for hot service. Bolts shall be high strength or intermediate strength with material conforming to ASTM A 193/A 193M.

2.7.6.4 Welded Fittings

Welded fittings shall conform to ASTM A 234/A 234M with WPA marking. Buttwelded fittings shall conform to ASME B16.9, and socket-welded fittings shall conform to ASME B16.11.

2.7.6.5 Cast-Iron Fittings

Fittings shall be ASME B16.4, Class 125, type required to match connecting piping.

2.7.6.6 Malleable-Iron Fittings

Fittings shall be ASME B16.3, type as required to match connecting piping.

2.7.6.7 Unions

Unions shall be ASME B16.39, Class 150.

2.7.6.8 Threads

Pipe threads shall conform to ASME B1.20.1.

2.7.6.9 Grooved Mechanical fittings

Joints and fittings shall be designed for not less than 862 kPa service and shall be the product of the same manufacturer. Fitting and coupling houses

shall be malleable iron conforming to ASTM A 47/A 47 M, Grade 32510; ductile iron conforming to ASTM A 536, Grade 65-45-12; or steel conforming to ASTM A 106, Grade B or ASTM A 53/A 53M. Gaskets shall be molded synthetic rubber with central cavity, pressure responsive configuration and shall conform to ASTM D 2000, Grade No. 2CA615A15B44F17Z for circulating medium up to 110 degrees C or Grade N0. M3BA610A15B44Z for circulating medium up to 93 degrees C (200 degrees F). Grooved joints shall conform to AWWA C606. Coupling nuts and bolts shall be steel and shall conform to ASTM A 183.

2.7.7 Copper Tubing and Fittings

2.7.7.1 Copper Tubing

Tubing shall be ASTM B 88, ASTM B 88M, Type K or L. Adapters for copper tubing shall be brass or bronze for brazed fittings.

2.7.7.2 Solder-Joint Pressure Fittings

Wrought copper and bronze solder-joint pressure fittings shall conform to ASME B16.22 and ASTM B 75M . Cast copper alloy solder-joint pressure fittings shall conform to ASME B16.18 and ASTM B 828.

2.7.7.3 Flared Fittings

Cast copper alloy fittings for flared copper tube shall conform to ASME B16.26 and ASTM B 62.

2.7.7.4 Adapters

Adapters may be used for connecting tubing to flanges and to threaded ends of valves and equipment. Extracted brazed tee joints produced with an acceptable tool and installed as recommended by the manufacturer may be used.

2.7.7.5 Threaded Fittings

Cast bronze threaded fittings shall conform to ASME B16.15.

2.7.7.6 Brazing Material

Brazing material shall conform to AWS A5.8.

2.7.7.7 Brazing Flux

Flux shall be in paste or liquid form appropriate for use with brazing material. Flux shall be as follows: lead-free; have a 100 percent flushable residue; contain slightly acidic reagents; contain potassium borides, and contain fluorides. Silver brazing materials shall be in accordance with AWS A5.8.

2.7.7.8 Solder Material

Solder metal shall conform to ASTM B 32 95-5 tin-antimony.

2.7.7.9 Solder Flux

Flux shall be either liquid or paste form, non-corrosive and conform to ASTM B 813.

2.7.8 Dielectric Unions

Dielectric unions shall have metal connections on both ends. The ends shall be threaded, flanged, or brazed to match adjacent piping. Metal parts of the union shall be separated so that the electrical current is below 1 percent of the galvanic current which would exist upon metal-to-metal contact.

2.7.9 Flexible Pipe Connectors

Flexible pipe connectors shall be designed for 861.8 kPa or 1034.2 kPa service. Connectors shall be installed where indicated. The flexible section shall be constructed of rubber, tetrafluoroethylene resin, or corrosion-resisting steel, bronze, monel, or galvanized steel. Materials used and the configuration shall be suitable for the pressure, vacuum, and temperature medium. The flexible section shall be suitable for service intended and may have threaded, welded, soldered, flanged, or socket ends. Flanged assemblies shall be equipped with limit bolts to restrict maximum travel to the manufacturer's standard limits. Unless otherwise indicated, the length of the flexible connectors shall be as recommended by the manufacturer for the service intended. Internal sleeves or liners, compatible with circulating medium, shall be provided when recommended by the manufacturer. Covers to protect the bellows shall be provided where indicated.

2.7.10 Pipe Supports

Pipe supports shall conform to MSS SP-58 and MSS SP-69.

2.7.11 Valves

Valves shall be Class 125 and shall be suitable for the application. Grooved ends per AWWA C606 may be used for water service only. Valves in nonboiler external piping shall meet the material, fabrication and operating requirements of ASME B31.1. The connection type of all valves shall match the same type of connection required for the piping on which installed.

2.7.11.1 Gate Valves

Gate valves 65 mm and smaller shall conform to MSS SP-80 bronze rising stem, threaded, solder, or flanged ends. Gate valves 80 mm (3 inches) and larger shall conform to MSS SP-70 cast iron bronze trim, outside screw and yoke, flanged, or threaded ends.

2.7.11.2 Globe Valves

Globe valves 65 mm (2-1/2 inches) and smaller shall conform to MSS SP-80, bronze, threaded, soldered, or flanged ends. Globe valves 80 mm and larger shall conform to MSS SP-85, cast iron, bronze trim, flanged, or threaded ends.

2.7.11.3 Check Valves

Check valves 65 mm and smaller shall conform to MSS SP-80, bronze, threaded, soldered, or flanged ends. Check valves 80 mm and larger shall conform to MSS SP-71, cast iron, bronze trim, flanged, or threaded ends.

2.7.11.4 Angle Valves

Angle valves 65 mm and smaller shall conform to MSS SP-80 bronze, threaded, soldered, or flanged ends. Angle valves 80 mm and larger shall conform to MSS SP-85, cast iron, bronze trim, flanged, or threaded ends.

2.7.11.5 Ball Valves

Ball valves 15 mm and larger shall conform to MSS SP-72 or MSS SP-110, ductile iron or bronze, threaded, soldered, or flanged ends.

2.7.11.6 Plug Valves

Plug valves 50 mm (2 inches) and larger shall conform to MSS SP-78. Plug valves smaller than 50 mm (2 inches) shall conform to ASME B16.34.

2.7.11.7 Grooved End Valves

Valves with grooved ends per AWWA C606 may be used if the valve manufacturer certifies that their performance meets the requirements of the standards indicated for each type of valve.

2.7.11.8 Balancing Valves

Manual Balancing Valves. Balancing valves 50 mm (2 inches) or smaller shall be bronze with NPT connections for black steel pipe and brazed connections for copper tubing. Valves 25 mm (1 inch) or larger may be all iron with threaded or flanged ends. The valves shall have a square head or similar device and an indicator arc and shall be designed for 120 degrees C. Iron valves shall be lubricated, nonlubricated, or tetrafluoroethylene resin-coated plug valves. In lieu of plug valves, ball valves may be used. Plug valves and ball valves 200 mm (8 inches) larger shall be provided with manual gear operators with position indicators.

Calibrated Balancing Valves. Calibrated balancing valves shall have meter connections with positive shutoff valves. An integral pointer shall register the degree of valve opening. Valves shall be calibrated so that flow rate can be determined when valve opening in degrees and pressure differential across valve is known. Each balancing valve shall be constructed with internal seals to prevent leakage and shall be supplied with preformed insulation. Valves shall be suitable for 120 degrees C temperature and working pressure of the pipe in which installed. Valve bodies shall be provided with tapped openings and pipe extensions with shutoff valves outside of pipe insulation. The pipe extensions shall be provided with quick connecting hose fittings for a portable meter to measure the pressure differential. In lieu of the balancing valve with integral metering connections, a ball valve or plug valve with a separately installed orifice plate or venturi tube may be used for balancing.

Automatic Flow Control Valves. In lieu of balancing valves specified, automatic flow control valves may be provided to maintain constant flow, and shall be designed to be sensitive to pressure differential across the valve to provide the required opening. Valves shall be selected for the flow required and provided with a permanent nameplate or tag carrying a permanent record of the factory-determined flow rate and flow control pressure levels. Valves shall control the flow within 5 percent of the tag rating. Valves shall be suitable for the maximum operating pressure of 862 kPa (125 psig) or 150 percent of the system operating pressure, whichever is the greater. Where the available system pressure is not adequate to

provide the minimum pressure differential that still allows flow control, the system pump head capability shall be appropriately increased. Where flow readings are provided by remote or portable meters, valve bodies shall be provided with tapped openings and pipe extensions with shutoff valves outside of pipe insulation. The pipe extensions shall be provided with quick connecting hose fittings for a portable meter to measure the pressure differential across the automatic flow control valve. Automatic flow control valve specified may be substituted for orifice plate or venturi tube flow measuring devices.

Portable Differential Meters. One portable differential meter shall be furnished if calibrated balancing valve or automatic flow control valve is required. The meter suitable for the operating pressure specified shall be complete with hoses, vent, shutoff valves, and carrying case as recommended by the valves manufacturer.

2.7.11.9 Butterfly Valves

Butterfly valves shall be 2-flange type or lug wafer type, and shall be bubbletight at 1135 kPa. Valve bodies shall be cast iron, malleable iron, or steel. ASTM A 167, Type 404 or Type 316, corrosion resisting steel stems, bronze, or corrosion resisting steel discs, and synthetic rubber seats shall be provided. Valves smaller than 200 mm shall have throttling handles with a minimum of seven locking positions. Valves 200 mm and larger shall have totally enclosed manual gear operators with adjustable balance return stops and position indicators. Valves in insulated lines shall have extended neck to accommodate insulation thickness.

2.7.11.10 Drain valves

Drain valves shall be provided at each drain point of blowdown as recommended by the boiler manufacturer. Piping shall conform to ASME BPV IV and ASTM A 53/A 53M.

2.7.11.11 Safety Valves

Safety valves shall have steel bodies and shall be equipped with corrosion-resistant trim and valve seats. The valves shall be properly guided and shall be positive closing so that no leakage can occur. Adjustment of the desired back-pressure shall cover the range between 15 and 70 kPa. The adjustment shall be made externally, and any shafts extending through the valve body shall be provided with adjustable stuffing boxes having renewable packing. Boiler safety valves of proper size and of the required number, in accordance with ASME BPV IV, shall be installed so that the discharge will be through piping extended to the nearest floor drain as indicated. Each discharge pipe for hot water service shall be pitched away from the valve seat.

2.7.11.12 Pump Discharge Valves

Pump discharge valves shall be installed where indicated and shall perform the functions of a nonslam check valve, a manual balancing valve, and a shutoff. Valves shall be of cast iron or ductile iron construction with bronze and/or stainless steel accessories. Valves shall have an integral pointer which registers the degree of valve opening. Flow through the valve shall be manually adjustable from bubble tight shutoff to full flow. Valves smaller than 50 mm (2 inches) shall have NPT connections. Valves 50 mm (2 inches) and larger shall have flanged or grooved end connections. The valve design shall allow the back seat for the stem to be replaced in

the field under full line pressure.

2.7.12 Strainers

Basket and "Y" type strainers shall be the same size as the pipelines in which they are installed. The strainer bodies shall be heavy and durable, fabricated of cast iron, and shall have bottoms drilled and tapped with a gate valve attached for blowdown purposes. Strainers shall be designed for 850 kPa (125 psig) service and 115 degrees C (240 degrees F). The bodies shall have arrows clearly cast on the sides indicating the direction of flow. Each strainer shall be equipped with an easily removable cover and sediment screen. The screen shall be made of 0.795 mm thick corrosion-resistant steel with small perforations to provide a net free area through the basket of at least 3.30 times that of the entering pipe. The flow shall be into the screen and out through the perforations.

2.7.13 Combination Strainer and Suction Diffuser

A combination strainer and suction diffuser, consisting of an angle type body with removable strainer basket and straightening vanes, a suction pipe support, and a blowdown outlet, shall be provided on pump suction. The combination strainer and suction diffuser shall be in accordance with ASTM F 1199, except as modified herein

2.7.14 Filter/Strainer Vessels

Filter/strainer vessels shall be constructed of 304/316 stainless steel with 304 ss wire mesh lined basket strainer for 50 micron application with filter bag. Vessels shall be designed for side inlet and bottom outlet connection. Vessels shall be equipped with swing bolt closure and differential pressure gauge taps equipped with pressure gauge. Seal material provided shall be suitable for the heating water system water treatment chemical (Vessels will be used as water treatment chemical feeder as specified herein). Vessels shall be U.F. Strainrite, Model CQX 180 or approved equal.

2.7.15 Pressure Gauges

Gauges shall conform to ASME B40.1 and shall be provided with throttling type needle valve or a pulsation dampener and shutoff valve. Minimum dial size shall be 90 mm. A pressure gauge shall be provided for each boiler in a visible location on the boiler. Pressure gauges shall be provided with readings in Kpa and psi. Pressure gauges shall have an indicating pressure range that is related to the operating pressure of the fluid in accordance with the following table:

Operating Pressure (kPA)	Pressure Range (kPA)
519-1030	0-1400
105-518	0-690
14-104	0-210 (retard)

Operating Pressure (psi)	Pressure Range (psi)
76-150	0-200
16-75	0-100
2-15	0-30 (retard)

2.7.16 Thermometers

Thermometers shall be provided with wells and separable corrosion-resistant steel sockets. Thermometers for inlet water and outlet water for each hot water boiler shall be provided in a visible location on the boiler. Thermometers shall have brass, malleable iron, or aluminum alloy case and frame, clear protective face, permanently stabilized glass tube with indicating-fluid column, white face, black numbers, and a minimum 225 mm (9 inch) scale. The operating range of the thermometers shall be 0-100 degrees centigrade (32 - 212 degrees Fahrenheit). The thermometers shall be provided with readings in degrees centigrade and Fahrenheit.

2.7.17 Air Vents

2.7.17.1 Manual Air Vents

Manual air vents shall be brass or bronze valves or cocks suitable for the pressure rating of the piping system and furnished with threaded plugs or caps.

2.7.17.2 Automatic Air Vents

Automatic air vents shall be 20 mm quick-venting float and vacuum air valves. Each air vent valve shall have a large port permitting the expulsion of the air without developing excessive back pressure, a noncollapsible metal float which will close the valve and prevent the loss of water from the system, an air seal that will effectively close and prevent the re-entry of air into the system when subatmospheric pressures prevail therein, and a thermostatic member that will close the port against the passage of steam from the system. The name of the manufacturer shall be clearly stamped on the outside of each valve. The air vent valve shall be suitable for the pressure rating of the piping system.

2.8 ELECTRICAL EQUIPMENT

Electric motor-driven equipment shall be provided complete with motors, motor starters, and necessary control devices. Electrical equipment, motor control devices, motor efficiencies and wiring shall be as specified in Section 16415 ELECTRICAL WORK, INTERIOR. Motors which are not an integral part of a packaged boiler shall be rated for high efficiency service. Motors which are an integral part of the packaged boiler shall be the highest efficiency available by the manufacturer of the packaged boiler. Motor starters shall be provided complete with properly sized thermal overload protections and other appurtenances necessary for the motor control specified. Starters shall be furnished in general purpose enclosures. Manual or automatic control and protective or signal devices required for the operation specified and any control wiring required for controls and devices but not shown shall be provided.

2.8.1 Motor Ratings

Motors shall be suitable for the voltage and frequency provided. Motors 375 W (1/2 hp) and larger shall be three-phase, unless otherwise indicated. Motors shall be of sufficient capacity to drive the equipment at the specified capacity without exceeding the nameplate rating on the motor.

2.8.2 Motor Controls

Motor controllers shall be provided complete with properly sized thermal overload protection. Manual or automatic control and protective or signal

devices required for the operation specified and any wiring required to such devices shall be provided. Where two-speed or variable-speed motors are indicated, solid-state variable-speed controllers may be provided to accomplish the same function. Solid state variable speed controllers shall be utilized for fractional through 7.46 kW (10 hp) ratings. Adjustable frequency drives shall be used for larger motors.

2.9 INSULATION

Shop and field-applied insulation shall be as specified in Section 15080 THERMAL INSULATION FOR MECHANICAL SYSTEMS.

2.10 TOOLS

Special tools shall be furnished. Special tools shall include uncommon tools necessary for the operation and maintenance of boilers, burners, pumps, fans, controls, meters, special piping systems, and other equipment. Small hand tools shall be furnished within a suitable cabinet, mounted where directed.

2.10.1 Breeching Cleaner

A cleaner shall be provided to clean the breeching. The cleaner shall have a jointed handle of sufficient length to clean the breeching without dismantling.

2.10.2 Tube Cleaner

A water-driven tube cleaner with three rotary cutters and rotary wire brush complete with the necessary length of armored water hose, valves, and other appurtenances necessary for operation shall be provided. Tube cleaner and rotary brush shall be provided for each size of water tube in the boiler, with one extra set of cutters for each size cleaner. Necessary valves and fittings shall be provided to permit ready connection of the cleaner hose to a high-pressure pump for cold water supply to operate the cleaner.

2.10.3 Wrenches

Wrenches shall be provided as required for specialty fittings such as manholes, handholes, and cleanouts. One set of extra gaskets shall be provided for all manholes and handholes, for pump barrels, and other similar items of equipment. Gaskets shall be packaged and properly identified.

2.11 BOILER WATER TREATMENT

Heating water shall be treated to maintain the conditions recommended by the boiler manufacturer. Chemicals shall meet required federal, state, and local environmental regulations for the treatment of boilers and discharge to the sanitary sewer.

Filter/strainer vessel provided on the heating water piping as indicated and specified shall be used as chemical feeder to feed chamical into the system.

The services of a company regularly engaged in the treatment of heating water system shall be used to determine the correct chemicals required, the concentrations required, and the water treatment equipment sizes and flow rates required. The company shall maintain the chemical treatment and

provide all chemicals required for the heating water system for a period of 1 year from the date of occupancy. The chemical treatment and services provided over the 1 year period shall meet the requirements of this specification as well as the recommendations from the manufacturers of the hot water boilers. Acid treatment and proprietary chemicals shall not be used.

PART 3 EXECUTION

3.1 ERECTION OF BOILER AND AUXILIARY EQUIPMENT

Boiler and auxiliary equipment shall be installed in accordance with manufacturer's written instructions. Proper provision shall be made for expansion and contraction between boiler foundation and floor. This joint shall be packed with suitable nonasbestos rope and filled with suitable compound that will not become soft at a temperature of 40 degrees C. Boilers and firing equipment shall be supported from the foundations by structural steel completely independent of all brickwork. Boiler supports shall permit free expansion and contraction of each portion of the boiler without placing undue stress on any part of the boiler or setting. Boiler breeching shall be as indicated with full provision for expansion and contraction between all interconnected components.

3.2 PIPING INSTALLATION

Unless otherwise specified, nonboiler external pipe and fittings shall conform to the requirements of ASME B31.1. Pipe installed shall be cut accurately to suit field conditions, shall be installed without springing or forcing, and shall properly clear windows, doors, and other openings. Cutting or other weakening of the building structure to facilitate piping installation will not be permitted. Pipes shall be free of burrs, oil, grease and other foreign material and shall be installed to permit free expansion and contraction without damaging the building structure, pipe, pipe joints, or pipe supports. Changes in direction shall be made with fittings, except that bending of pipe 100 mm and smaller will be permitted provided a pipe bender is used and wide sweep bends are formed. The centerline radius of bends shall not be less than 6 diameters of the pipe. Bent pipe showing kinks, wrinkles, flattening, or other malformations will not be accepted. Vent pipes shall be carried through the roof as directed and shall be properly flashed. Unless otherwise indicated, horizontal supply mains shall pitch down in the direction of flow with a grade of not less than 0.2 percent. Open ends of pipelines and equipment shall be properly capped or plugged during installation to keep dirt or other foreign materials out of the systems. Pipe not otherwise specified shall be uncoated. Unless otherwise specified or shown, final connections to equipment shall be made with malleable-iron unions for steel pipe 65 mm or less in diameter and with flanges for pipe 80 mm or more in diameter. Unions for copper pipe or tubing shall be brass or bronze. Reducing fittings shall be used for changes in pipe sizes. In horizontal hot water lines, reducing fittings shall be eccentric type to maintain the top of the lines at the same level to prevent air binding.

3.2.1 Hot Water Piping and Fittings

Pipe shall be black steel or copper tubing. Fittings for steel piping shall be black malleable iron or cast iron to suit piping. Fittings adjacent to valves shall suit valve material. Grooved mechanical fittings will not be allowed for water temperatures above 110 degrees C (230 degrees

F).

3.2.2 Vent Piping and Fittings

Vent piping shall be black steel. Fittings shall be black malleable iron or cast iron to suit piping.

3.2.3 Gauge Piping

Piping shall be copper tubing.

3.2.4 Joints

Joints between sections of steel pipe and between steel pipe and fittings shall be threaded, grooved, flanged or welded as indicated or specified. Except as otherwise specified, fittings 25 mm and smaller shall be threaded; fittings 32 mm and up to but not including 80 mm shall be either threaded, grooved, or welded; and fittings 80 mm and larger shall be either flanged, grooved, or welded. Pipe and fittings 32 mm and larger installed in inaccessible conduit or trenches beneath concrete floor slabs shall be welded. Connections to equipment shall be made with black malleable-iron unions for pipe 65 mm or smaller in diameter and with flanges for pipe 80 mm inches or larger in diameter. Joints between sections of copper tubing or pipe shall be flared, soldered, or brazed.

3.2.4.1 Threaded Joints

Threaded joints shall be made with tapered threads properly cut and shall be made perfectly tight with a stiff mixture of graphite and oil or with polytetrafluoroethylene tape applied to the male threads only and in no case to the fittings.

3.2.4.2 Welded Joints

Welded joints shall be in accordance with paragraph GENERAL REQUIREMENTS unless otherwise specified. Changes in direction of piping shall be made with welding fittings only; mitering or notching pipe to form elbows and tees or other similar type construction will not be permitted. Branch connections may be made with either welding tees or forged branch outlet fittings, either being acceptable without size limitation. Branch outlet fittings, where used, shall be forged, flared for improved flow characteristics where attached to the run, reinforced against external strains, and designed to withstand full pipe bursting strength. Socket weld joints shall be assembled so that the space between the end of the pipe and the bottom of the socket is no less than 1.5 mm and no more than 3 mm.

3.2.4.3 Grooved Mechanical Joints

Grooved mechanical joints may be provided for hot water systems in lieu of unions, welded, flanged, or screwed piping connections in low temperature hot water systems where the temperature of the circulating medium does not exceed 110 degrees C. Grooves shall be prepared according to the coupling manufacturer's instructions. Pipe and groove dimensions shall comply with the tolerances specified by the coupling manufacturer. The diameter of grooves made in the field shall be measured using a "go/no-go" gauge, vernier or dial caliper, or narrow-land micrometer. Groove width and dimension of groove from end of pipe shall be measured and recorded for each change in grooving tool setup to verify compliance with coupling

manufacturer's tolerances. Grooved joints shall not be used in concealed locations. Mechanical joints shall use rigid mechanical pipe couplings, except at equipment connections. At equipment connections, flexible couplings may be used. Coupling shall be of the bolted type for use with grooved end pipes, fittings, valves, and strainers. Couplings shall be self-centering and shall engage in a watertight couple.

3.2.4.4 Flared and Brazed Copper Pipe and Tubing

Tubing shall be cut square, and burrs shall be removed. Both inside of fittings and outside of tubing shall be cleaned thoroughly with sand cloth or steel wire brush before brazing. Annealing of fittings and hard-drawn tubing shall not occur when making connections. Installation shall be made in accordance with the manufacturer's recommendations. Mitering of joints for elbows and notching of straight runs of pipe for tees will not be permitted. Brazed joints shall be made in conformance with AWS B2.2, MSS SP-73, and CDA Tube Handbook with flux. Copper-to-copper joints shall include the use of copper-phosphorous or copper-phosphorous-silver brazing metal without flux. Brazing of dissimilar metals (copper to bronze or brass) shall include the use of flux with either a copper-phosphorous, copper-phosphorous-silver or a silver brazing filler metal. Joints for flared fittings shall be of the compression pattern. Swing joints or offsets shall be provided in all branch connections, mains, and risers to provide for expansion and contraction forces without undue stress to the fittings or to short lengths of pipe or tubing. Flared or brazed copper tubing to pipe adapters shall be provided where necessary for joining threaded pipe to copper tubing.

3.2.4.5 Soldered Joints

Soldered joints shall be made with flux and are only acceptable for lines 50 mm and smaller. Soldered joints shall conform to ASME B31.5 and CDA Tube Handbook.

3.2.4.6 Copper Tube Extracted Joint

An extruded mechanical tee joint may be made in copper tube. Joint shall be produced with an appropriate tool by drilling a pilot hole and drawing out the tube surface to form a collar having a minimum height of three times the thickness of the tube wall. To prevent the branch tube from being inserted beyond the depth of the extracted joint, dimpled depth stops shall be provided. The branch tube shall be notched for proper penetration into fitting to assure a free flow joint. Extracted joints shall be brazed using a copper phosphorous classification brazing filler metal. Soldered joints will not be permitted.

3.2.5 Flanges and Unions

Flanges shall be faced true, provided with 1.6 mm thick gaskets, and made square and tight. Where steel flanges mate with cast-iron flanged fittings, valves, or equipment, they shall be provided with flat faces and full face gaskets. Union or flange joints shall be provided in each line immediately preceding the connection to each piece of equipment or material requiring maintenance such as coils, pumps, control valves, and other similar items. Dielectric pipe unions shall be provided between ferrous and nonferrous piping to prevent galvanic corrosion. The dielectric unions shall have metal connections on both ends. The ends shall be threaded, flanged, or brazed to match adjacent piping. The metal parts of the union shall be separated so that the electrical current is below 1 percent of the

galvanic current which would exist upon metal-to-metal contact. Gaskets, flanges, and unions shall be installed in accordance with manufacturer's recommendations.

3.2.6 Branch Connections

Branches from the main shall pitch up or down as shown to prevent air entrapment. Connections shall ensure unrestricted circulation, eliminate air pockets, and permit complete drainage of the system. Branches shall pitch with a grade of not less than 8 mm in 1 m.

3.2.7 Flared, Brazed, and Soldered Copper Pipe and Tubing

Copper tubing shall be flared, brazed, or soldered. Tubing shall be cut square, and burrs shall be removed. Both inside of fittings and outside of tubing shall be cleaned thoroughly with sand cloth or steel wire brush before brazing. Annealing of fittings and hard-drawn tubing shall not occur when making connections. Installation shall be made in accordance with the manufacturer's recommendations. Mitering of joints for elbows and notching of straight runs of pipe for tees will not be permitted. Joints for flared fittings shall be of the compression pattern. Swing joints or offsets shall be provided on branch connections, mains, and risers to provide for expansion and contraction forces without undue stress to the fittings or to short lengths of pipe or tubing. Pipe adapters shall be provided where necessary for joining threaded pipe to copper tubing. Brazed joints shall be made in conformance with MSS SP-73, and CDA Tube Handbook. Copper-to-copper joints shall include the use of copper-phosphorous or copper-phosphorous-silver brazing metal without flux. Brazing of dissimilar metals (copper to bronze or brass) shall include the use of flux with either a copper-phosphorous, copper-phosphorous-silver, or a silver brazing filler metal. Soldered joints shall be made with flux and are only acceptable for lines 50 mm or smaller. Soldered joints shall conform to ASME B31.5 and shall be in accordance with CDA Tube Handbook.

3.2.8 Copper Tube Extracted Joint

An extracted mechanical tee joint may be made in copper tube. Joint shall be produced with an appropriate tool by drilling a pilot hole and drawing out the tube surface to form a collar having a minimum height of three times the thickness of the tube wall. To prevent the branch tube from being inserted beyond the depth of the extracted joint, dimpled depth stops shall be provided. The branch tube shall be notched for proper penetration into fitting to assure a free flow joint. Extracted joints shall be brazed using a copper phosphorous classification brazing filler metal. Soldered joints will not be permitted.

3.2.9 Supports

Hangers used to support piping 50 mm and larger shall be fabricated to permit adequate adjustment after erection while still supporting the load. Pipe guides and anchors shall be installed to keep pipes in accurate alignment, to direct the expansion movement, and to prevent buckling, swaying, and undue strain. Piping subjected to vertical movement when operating temperatures exceed ambient temperatures shall be supported by variable spring hangers and supports or by constant support hangers. Threaded rods which are used for support shall not be formed or bent.

3.2.9.1 Pipe Hangers, Inserts, and Supports

Pipe hangers, inserts, and supports shall conform to MSS SP-58 and MSS SP-69, except as modified herein.

a. Types 5, 12, and 26 shall not be used.

b. Type 3 shall not be used on insulated pipe which has a vapor barrier. Type 3 may be used on insulated pipe that does not have a vapor barrier if clamped directly to the pipe, if the clamp bottom does not extend through the insulation, and if the top clamp attachment does not contact the insulation during pipe movement.

c. Type 18 inserts shall be secured to concrete forms before concrete is placed. Continuous inserts which allow more adjustment may be used if they otherwise meet the requirements for Type 18 inserts.

d. Type 19 and 23 C-clamps shall be torqued per MSS SP-69 and have both locknuts and retaining devices furnished by the manufacturer. Field fabricated C-clamp bodies or retaining devices are not acceptable.

e. Type 20 attachments used on angles and channels shall be furnished with an added malleable-iron heel plate or adapter.

f. Type 24 may be used only on trapeze hanger systems or on fabricated frames.

g. Horizontal pipe supports shall be spaced as specified in MSS SP-69 and a support shall be installed not over 300 mm from the pipe fitting joint at each change in direction of the piping. Pipe supports shall be spaced not over 1500 mm apart at valves.

h. Vertical pipe shall be supported at each floor, except at slab-on-grade, and at intervals of not more than 4500 mm, not more than 2400 mm from end of risers, and at vent terminations.

i. Type 35 guides using steel, reinforced polytetrafluoroethylene (PTFE) or graphite slides shall be provided where required to allow longitudinal pipe movement. Lateral restraints shall be provided as required. Slide materials shall be suitable for the system operating temperatures, atmospheric conditions, and bearing loads encountered.

(1) Where steel slides do not require provisions for restraint of lateral movement, an alternate guide method may be used. On piping 100 mm (4 inches) and larger, a Type 39 saddle may be welded to the pipe and freely rested on a steel plate. On piping under 100 mm (4 inches), a Type 40 protection shield may be attached to the pipe or insulation and freely rested on a steel slide plate.

(2) Where there are high system temperatures and welding to piping is not desirable, the Type 35 guide shall include a pipe cradle welded to the guide structure and strapped securely to the pipe. The pipe shall be separated from the slide material by at least 100 mm or by an amount adequate for the insulation, whichever is greater.

j. Except for Type 3, pipe hangers on horizontal insulated pipe shall

be the size of the outside diameter of the insulation.

k. Piping in trenches shall be supported as indicated.

l. Structural steel attachments and brackets required to support piping, headers, and equipment, but not shown, shall be provided under this section. Material and installation shall be as specified under Section 05120 STRUCTURAL STEEL. Pipe hanger loads suspended from steel joist between panel points shall not exceed 22 kg. Loads exceeding 22 kg shall be suspended from panel points.

3.2.9.2 Multiple Pipe Runs

In the support of multiple pipe runs on a common base member, a clip or clamp shall be used where each pipe crosses the base support member. Spacing of the base support member shall not exceed the hanger and support spacing required for any individual pipe in the multiple pipe run. The clips or clamps shall be rigidly attached to the common base member. A clearance of 3 mm shall be provided between the pipe insulation and the clip or clamp for piping which may be subjected to thermal expansion.

3.2.10 Valves

Valves shall be installed where indicated, specified, and required for functioning and servicing of the systems. Valves shall be safely accessible. Swing check valves shall be installed upright in horizontal lines and in vertical lines only when flow is in the upward direction. Gate and globe valves shall be installed with stems horizontal or above. Valves to be brazed shall be disassembled prior to brazing and all packing removed. After brazing, the valves shall be allowed to cool before reassembling.

3.2.11 Pipe Sleeves

Pipe passing through concrete or masonry walls or concrete floors or roofs shall be provided with pipe sleeves fitted into place at the time of construction. A waterproofing clamping flange shall be installed as indicated where membranes are involved. Sleeves shall not be installed in structural members except where indicated or approved. Rectangular and square openings shall be as detailed. Each sleeve shall extend through its respective wall, floor, or roof. Sleeves through walls shall be cut flush with wall surface. Sleeves through floors shall extend above top surface of floor a sufficient distance to allow proper flashing or finishing. Sleeves through roofs shall extend above the top surface of roof at least 150 mm for proper flashing or finishing. Unless otherwise indicated, sleeves shall be sized to provide a minimum clearance of 6 mm between bare pipe and sleeves or between jacket over insulation and sleeves. Sleeves in waterproofing membrane floors, bearing walls, and wet areas shall be galvanized steel pipe or cast-iron pipe. Sleeves in nonbearing walls, floors, or ceilings may be galvanized steel pipe, cast-iron pipe, or galvanized sheet metal with lock-type longitudinal seam. Except in pipe chases or interior walls, the annular space between pipe and sleeve or between jacket over insulation and sleeve in nonfire rated walls shall be sealed as indicated and specified in Section 07900 JOINT SEALING. Metal jackets shall be provided over insulation passing through exterior walls, firewalls, fire partitions, floors, or roofs.

a. Metal jackets shall not be thinner than 0.1524 mm (0.006 inch)

thick aluminum, if corrugated, and 0.4 mm (0.016 inch) thick aluminum, if smooth.

b. Metal jackets shall be secured with aluminum or stainless steel bands not less than 9 mm wide and not more than 200 mm apart. When penetrating roofs and before fitting the metal jacket into place, a 15 mm wide strip of sealant shall be run vertically along the inside of the longitudinal joint of the metal jacket from a point below the backup material to a minimum height of 1000 mm above the roof. If the pipe turns from vertical to horizontal, the sealant strip shall be run to a point just beyond the first elbow. When penetrating waterproofing membrane for floors, the metal jacket shall extend from a point below the back-up material to a minimum distance of 50 mm above the flashing. For other areas, the metal jacket shall extend from a point below the backup material to a point 300 mm above material to a minimum distance of 50 mm above the flashing. For other areas, the metal jacket shall extend from a point below the backup material to a point 300 mm above the floor; when passing through walls above grade, the jacket shall extend at least 100 mm beyond each side of the wall.

3.2.11.1 Pipes Passing Through Waterproofing Membranes

In addition to the pipe sleeves referred to above, pipes passing through waterproofing membranes shall be provided with a 1.6 mm lead flashing or a 0.55 mm copper flashing, each within an integral skirt or flange. Flashing shall be suitably formed, and the skirt or flange shall extend not less than 200 mm from the pipe and shall set over the membrane in a troweled coating of bituminous cement. The flashing shall extend above the roof or floor a minimum of 250 mm. The annular space between the flashing and the bare pipe or between the flashing and the metal-jacket-covered insulation shall be sealed as indicated. Pipes up to and including 250 mm (10 inches) in diameter which pass through waterproofing membrane may be installed through a cast-iron sleeve with caulking recess, anchor lugs, flashing clamp device, and pressure ring with brass bolts. Waterproofing membrane shall be clamped into place and sealant shall be placed in the caulking recess.

3.2.11.2 Optional Modular Mechanical Sealing Assembly

At the option of the Contractor, a modular mechanical type sealing assembly may be installed in the annular space between the sleeve and conduit or pipe in lieu of a waterproofing clamping flange and caulking and sealing specified above. The seals shall include interlocking synthetic rubber links shaped to continuously fill the annular space between the pipe/conduit and sleeve with corrosion-protected carbon steel bolts, nuts, and pressure plates. The links shall be loosely assembled with bolts to form a continuous rubber belt around the pipe with a pressure plate under each bolt head and each nut. After the seal assembly is properly positioned in the sleeve, tightening of the bolt shall cause the rubber sealing elements to expand and provide a watertight seal between the pipe/conduit and the sleeve. Each seal assembly shall be sized as recommended by the manufacturer to fit the pipe/conduit and sleeve involved.

3.2.11.3 Optional Counterflashing

As alternates to caulking and sealing the annular space between the pipe and flashing or metal-jacket-covered insulation and flashing, counterflashing may consist of standard roof coupling for threaded pipe up

to 150 mm (6 inches) in diameter, lead flashing sleeve for dry vents with the sleeve turned down into the pipe to form a waterproof joint, or a tack-welded or banded-metal rain shield around the pipe, sealed as indicated.

3.2.11.4 Fire Seal

Where pipes pass through firewalls, fire partitions, or floors, a fire seal shall be provided as specified in Section 07840 FIRESTOPPING.

3.2.12 Balancing Valves

Balancing valves shall be installed as indicated.

3.2.13 Thermometer Wells

A thermometer well shall be provided in each return line for each circuit in multicircuit systems.

3.2.14 Air Vents

Air vents shall be installed where shown or directed. Air vents shall be installed in piping at all system high points. The vent shall remain open until water rises in the tank or pipe to a predetermined level at which time it shall close tight. An overflow pipe from the vent shall be run to a point designated by the Contracting Officer's representative. The inlet to the air vent shall have a gate valve or ball valve.

3.2.15 Escutcheons

Escutcheons shall be provided at all finished surfaces where exposed piping, bare or insulated, passes through floors, walls, or ceilings except in boiler, utility, or equipment rooms. Escutcheons shall be fastened securely to pipe or pipe covering and shall be chromium-plated iron or chromium-plated brass, either one-piece or split pattern, held in place by internal spring tension or setscrews.

3.2.16 Drains

A drain connection with a 25 mm (1 inch) gate valve or 20 mm (3/4 inch hose bib shall be installed at the lowest point in the return main near the boiler. In addition, threaded drain connections with threaded cap or plug shall be installed on the heat exchanger coil on each unit heater or unit ventilator and wherever required for thorough draining of the system.

3.2.17 Strainer Blow-Down Piping

Strainer blow-down connections shall be fitted with a black steel blow-down pipeline routed to an accessible location and provided with a blow-down valve.

3.3 GAS FUEL SYSTEM

Gas piping, fittings, valves, regulators, tests, cleaning, and adjustments shall be in accordance with the Section 15190 GAS PIPING SYSTEMS. NFPA 54 shall be complied with unless otherwise specified. Burners, pilots, and all accessories shall be listed in UL Gas&Oil Dir. The fuel system shall be provided with a gas tight, manually operated, UL listed stop valve at the gas-supply connections, a gas strainer, a pressure regulator, pressure

gauges, a burner-control valve, a safety shutoff valve suitable for size of burner and sequence of operation, and other components required for safe, efficient, and reliable operation as specified. Approved permanent and ready facilities to permit periodic valve leakage tests on the safety shutoff valve or valves shall be provided.

3.4 COLOR CODE MARKING AND FIELD PAINTING

Color code marking of piping shall be as specified in Section 09900 PAINTING GENERAL. Ferrous metal not specified to be coated at the factory shall be cleaned, prepared, and painted as specified in Section 09900 PAINTING, GENERAL. Exposed pipe covering shall be painted as specified in Section 09900 PAINTING, GENERAL. Aluminum sheath over insulation shall not be painted.

3.5 TEST OF BACKFLOW PREVENTION ASSEMBLIES

Backflow prevention assemblies shall be tested in accordance with Section 15400, PLUMBING, GENERAL PURPOSE.

3.6 HEATING SYSTEM TESTS

Before any covering is installed on pipe or heating equipment, the entire heating system's piping, fittings, and terminal heating units shall be hydrostatically tested and proved tight at a pressure of 1-1/2 times the design working pressure, but not less than 689 kPa. Before pressurizing system for test, items or equipment (e.g., vessels, pumps, instruments, controls, relief valves) rated for pressures below the test pressure shall be blanked off or replaced with spool pieces. Before balancing and final operating test, test blanks and spool pieces shall be removed; and protected instruments and equipment shall be reconnected. With equipment items protected, the system shall be pressurized to test pressure. Pressure shall be held for a period of time sufficient to inspect all welds, joints, and connections for leaks, but not less than 2 hours. No loss of pressure will be allowed. Leaks shall be repaired and repaired joints shall be retested. Repair joints shall not be allowed under the floor for floor radiant heating systems. If a leak occurs in tubing located under the floor in radiant heating systems, the entire zone that is leaking shall be replaced. If any repair is made above the floor for floor radiant heating systems, access shall be provided for the installed joint. Caulking of joints shall not be permitted. System shall be drained and after instruments and equipment are reconnected, the system shall be refilled with service medium and maximum operating pressure applied. The pressure shall be held while inspecting these joints and connections for leaks. The leaks shall be repaired and the repaired joints retested. Upon completion of hydrostatic tests and before acceptance of the installation, the Contractor shall balance the heating system in accordance with Section 15990 TESTING, ADJUSTING AND BALANCING OF HVAC SYSTEMS; and operating tests required to demonstrate satisfactory functional and operational efficiency shall be performed. The operating test shall cover a period of at least 24 hours for each system, and shall include, as a minimum, the following specific information in a report, together with conclusions as to the adequacy of the system:

a. Certification of balancing.

b. Time, date, and duration of test.

c. Outside and inside dry bulb temperatures.

d. Temperature of hot water supply leaving boiler.

e. Temperature of heating return water from system at boiler inlet.

f. Quantity of water feed to boiler.

g. Boiler make, type, serial number, design pressure, and rated capacity.

h. Fuel burner make, model, and rated capacity; ammeter and voltmeter readings for burner motor.

i. Circulating pump make, model, and rated capacity, and ammeter and voltmeter readings for pump motor during operation.

j. Flue-gas temperature at boiler outlet.

k. Percent carbon dioxide in flue-gas.

l. Grade or type and calorific value of fuel.

m. Draft at boiler flue-gas exit.

n. Draft or pressure in furnace.

o. Quantity of water circulated.

p. Quantity of fuel consumed.

q. Stack emission pollutants concentration.

Indicating instruments shall be read at half-hour intervals unless otherwise directed. The Contractor shall furnish all instruments, equipment, and personnel required for the tests and balancing. Fuels, water, and electricity shall be obtained as specified in the SPECIAL CONTRACT REQUIREMENTS. Operating tests shall demonstrate that fuel burners and combustion and safety controls meet the requirements of NFPA 8501.

3.7 CLEANING

3.7.1 Boilers and Piping

After the hydrostatic tests have been made and before the system is balanced and operating tests are performed, the boilers and feed water piping shall be thoroughly cleaned by filling the system with a solution consisting of either 0.5 kg of caustic soda or 0.5 kg of trisodium phosphate per 100 L of water. The proper safety precautions shall be observed in the handling and use of these chemicals. The water shall be heated to approximately 65 degrees C and the solution circulated in the system for a period of 48 hours. The system shall then be drained and thoroughly flushed out with fresh water. Strainers and valves shall be thoroughly cleaned. Prior to operating tests, air shall be removed from all water systems by operating the air vents.

3.7.2 Heating Units

Inside space heating equipment, and casing shall be thoroughly cleaned of debris and blown free of small particles of rubbish and dust and then

vacuum cleaned before installing outlet faces. Equipment shall be wiped clean, with all traces of oil, dust, dirt, or paint spots removed. Temporary filters shall be provided for fans that are operated during construction, and new filters shall be installed after construction dirt has been removed from the building, and the ducts, plenum, casings, and other items specified have been vacuum cleaned. System shall be maintained in this clean condition until final acceptance. Bearings shall be properly lubricated with oil or grease as recommended by the manufacturer. Belts shall be tightened to proper tension. Control valves and other miscellaneous equipment requiring adjustment shall be adjusted to setting indicated or directed. Fans shall be adjusted to the speed indicated by the manufacturer to meet specified conditions.

3.8 FUEL SYSTEM TESTS

The gas fuel system shall be tested in accordance with the test procedures outlined in NFPA 54.

3.9 FIELD TRAINING

The Contractor shall conduct a training course for the operating staff as designated by the Contracting Officer. The training period shall consist of a total of 8 hours of normal working time and shall start after the system is functionally completed but prior to final acceptance tests. The field instructions shall cover all of the items contained in the approved operation and maintenance instructions, as well as demonstrations of routine maintenance operations and boiler safety devices. The Contracting Officer shall be notified at least 14 days prior to date of proposed conduction of the training course.

-- End of Section --

SECTION 15650

CENTRAL REFRIGERATED AIR-CONDITIONING SYSTEM
07/92
AMENDMENT NO. 0004

PART 1 GENERAL

1.1 REFERENCES

The publications listed below form a part of this specification to the extent referenced. The publications are referred to in the text by basic designation only.

AIR CONDITIONING AND REFRIGERATION INSTITUTE (ARI)

ARI 450	(1999) Water-Cooled Refrigerant Condensers, Remote Type
ARI 460	(1994) Remote Mechanical-Draft Air-Cooled Refrigerant Condensers
ARI 480	(1995) Refrigerant-Cooled Liquid Coolers, Remote Type
ARI 495	(1999) Refrigerant Liquid Receivers
ARI 550	(1992) Centrifugal or Rotary Screw Water-Chilling Packages
ARI 560	(1992) Absorption Water Chilling and Water Heating Packages
ARI 575	(1994) Method of Measuring Machinery Sound Within an Equipment Space
ARI 590	(1992) Positive Displacement Compressor Water-Chilling Packages
ARI 700	(1995; Apx C) Specifications for Fluorocarbon and Other Refrigerants
ARI 710	(1995) Liquid-Line Driers
ARI 720	(1997) Refrigerant Access Valves and Hose Connectors
ARI 740	(1998) Refrigerant Recovery/Recycling Equipment
ARI 750	(1994) Thermostatic Refrigerant Expansion Valves
ARI 760	(1994) Solenoid Valves for Use with Volatile Refrigerants

AMERICAN BEARING MANUFACTURERS ASSOCIATION (AFBMA)

AFBMA Std 9	(1990) Load Ratings and Fatigue Life for Ball Bearings
AFBMA Std 11	(1990) Load Ratings and Fatigue Life for Roller Bearings

AMERICAN NATIONAL STANDARDS INSTITUTE (ANSI)

ANSI S1.13	(1995) Methods for the Measurement of Sound Pressure Levels

AMERICAN SOCIETY FOR TESTING AND MATERIALS (ASTM)

ASTM A 47	(1990; R 1995) Ferritic Malleable Iron Castings
ASTM A 47M	(1999) Ferritic Malleable Iron Castings (Metric)
ASTM A 48	(1994a) Gray Iron Castings
ASTM A 48M	(1994el) Gray Iron Castings (Metric)
ASTM A 53	(1999b) Pipe, Steel, Black and Hot-Dipped, Zinc-Coated, Welded and Seamless
ASTM A 106	(1999el) Seamless Carbon Steel Pipe for High-Temperature Service
ASTM A 123/A 123M	(1997ael) Zinc (Hot-Dip Galvanized) Coatings on Iron and Steel Products
ASTM A 153/A 153M	(1998) Zinc Coating (Hot-Dip) on Iron and Steel Hardware
ASTM A 181/A181M	(1995b) Carbon Steel Forgings for General-Purpose Piping
ASTM A 183	(1983; R 1998) Carbon Steel Track Bolts and Nuts
ASTM A 193/A 193M	(1999) Alloy-Steel and Stainless Steel Bolting Materials for High-Temperature Service
ASTM A 234/A 234M	(1999) Piping Fittings of Wrought Carbon Steel and Alloy Steel for Moderate and High Temperature Service
ASTM A 307	(1997) Carbon Steel Bolts and Studs, 60 000 PSI Tensile Strength
ASTM A 334/A 334M	(1999) Seamless and Welded Carbon and Alloy-Steel Tubes for Low-Temperature Service
ASTM A 536	(1999el) Ductile Iron Castings

ASTM A 733	(1999) Welded and Seamless Carbon Steel and Austenitic Stainless Steel Pipe Nipples
ASTM B 32	(1996) Solder Metal
ASTM B 62	(1993) Composition Bronze or Ounce Metal Castings
ASTM B 75	(1997) Seamless Copper Tube
ASTM B 75M	(1997) Seamless Copper Tube (Metric)
ASTM B 88	(1996) Seamless Copper Water Tube
ASTM B 88M	(1996) Seamless Copper Water Tube (Metric)
ASTM B 117	(1997) Operating Salt Spray (Fog) Apparatus
ASTM B 280	(1998) Seamless Copper Tube for Air Conditioning and Refrigeration Field Service
ASTM B 424	(1998) Ni-Fe-Cr-Mo-Cu Alloy (UNS N08825 and UNS N08221) Plate, Sheet, and Strip
ASTM B 650	(1995) Electrodeposited Engineering Chromium Coatings on Ferrous Substrates
ASTM B 813	(1993) Liquid and Paste Fluxes for Soldering Applications of Copper and Copper Alloy Tube
ASTM C 67	(1998a) Sampling and Testing Brick and Structural Clay Tile
ASTM C 534	(1999) Preformed Flexible Elastomeric Cellular Thermal Insulation in Sheet and Tubular Form
ASTM D 520	(1984; R 1995el) Zinc Dust Pigment
ASTM D 596	(1991; R 1995) Reporting Results of Analysis of Water
ASTM D 1384	(1997a) Corrosion Test for Engine Coolants in Glassware
ASTM D 1784	(1999a) Rigid Poly(Vinyl Chloride) (PVC) Compounds and Chlorinated Poly(Vinyl Chloride) (CPVC) Compounds
ASTM D 2000	(1999) Rubber Products in Automotive Applications
ASTM D 3308	(1997) PTFE Resin Skived Tape
ASTM E 84	(1999) Surface Burning Characteristics of Building Materials

ASTM F 104	(1995) Nonmetallic Gasket Materials
ASTM F 1199	(1988; R 1998) Cast (All Temperature and Pressures) and Welded Pipe Line Strainers (150 psig and 150 degrees F Maximum)
ASTM F 1200	(1988; R 1998) Fabricated (Welded) Pipe Line Strainers (Above 150 psig and 150 degrees F)

AMERICAN SOCIETY OF HEATING, REFRIGERATING AND AIR-CONDITIONING ENGINEERS (ASHRAE)

ASHRAE 15	(1994) Safety Code for Mechanical Refrigeration
ASHRAE 34	(1997) Number Designation and Safety Classification of Refrigerants
ASHRAE 64	(1995) Methods of Testing Remote Mechanical-Draft Evaporative Refrigerant Condensers

ASME INTERNATIONAL (ASME)

ASME B1.20.1	(1983; R 1992) Pipe Threads, General Purpose (Inch)
ASME B16.5	(1996; B16.5a) Pipe Flanges and Flanged Fittings NPS 1/2 thru NPS 24
ASME B16.9	(1993) Factory-Made Wrought Steel Buttwelding Fittings
ASME B16.11	(1996) Forged Fittings, Socket-Welding and Threaded
ASME B16.18	(1984; R 1994) Cast Copper Alloy Solder Joint Pressure Fittings
ASME B16.21	(1992) Nonmetallic Flat Gaskets for Pipe Flanges
ASME B16.22	(1995; B16.22a1998) Wrought Copper and Copper Alloy Solder Joint Pressure Fittings
ASME B16.26	(1988) Cast Copper Alloy Fittings for Flared Copper Tubes
ASME B16.39	(1998) Malleable Iron Threaded Pipe Unions Classes 150, 250, and 300
ASME B31.1	(1998) Power Piping
ASME B31.5	(1992; B31.5a1994) Refrigeration Piping
ASME B40.1	(1991) Gauges - Pressure Indicating Dial Type - Elastic Element

ASME BPV VIII Div 1	(1998) Boiler and Pressure Vessel Code; Section VIII, Pressure Vessels Division 1 - Basic Coverage
ASME BPV IX	(1998) Boiler and Pressure Vessel Code; Section IX, Welding and Brazing Qualifications
ASME PTC 23	(1986; Addenda 1992, R 1997) Atmospheric Water Cooling Equipment

AMERICAN WATER WORKS ASSOCIATION (AWWA)

AWWA C606	(1997) Grooved and Shouldered Joints

AMERICAN WELDING SOCIETY (AWS)

AWS A5.8	(1992) Filler Metals for Brazing and Braze Welding
AWS D1.1	(1998) Structural Welding Code - Steel

CALIFORNIA REDWOOD ASSOCIATION (CRA)

CRA RIS-01-SS	(1997) Standard Specifications for Grades of California Redwood Lumber

COOLING TOWER INSTITUTE (CTI)

CTI ATC-105	(1997) Acceptance Test Code
CTI Std-103	(1994) The Design of Cooling Towers with Redwood Lumber
CTI Std-111	(1998) Gear Speed Reducers
CTI Std-112	(1986; R 1997) Pressure Preservative Treatment of Lumber
CTI Std-114	(1996) The Design of Cooling Towers with Douglas Fir Lumber
CTI Std-134	(1996) Plywood for Use in Cooling Towers
CTI Std-137	(1994) Fiberglass Pultruded Structural Products for Use in Cooling Towers

EXPANSION JOINT MANUFACTURERS ASSOCIATION (EJMA)

EJMA Stds	(1998; 7th Edition) EJMA Standards

HYDRAULIC INSTITUTE (HI)

HI 1.1-1.5	(1994) Centrifugal Pumps

MANUFACTURERS STANDARDIZATION SOCIETY OF THE VALVE AND FITTINGS INDUSTRY (MSS)

MSS SP-25	(1998) Standard Marking System for Valves, Fittings, Flanges and Unions
MSS SP-58	(1993) Pipe Hangers and Supports - Materials, Design and Manufacture
MSS SP-67	(1995) Butterfly Valves
MSS SP-69	(1996) Pipe Hangers and Supports - Selection and Application
MSS SP-70	(1998) Cast Iron Gate Valves, Flanged and Threaded Ends
MSS SP-71	(1997) Gray Iron Swing Check Valves, Flanges and Threaded Ends
MSS SP-72	(1992) Ball Valves with Flanged or Butt-Welding Ends for General Service
MSS SP-78	(1998) Cast Iron Plug Valves, Flanged and Threaded Ends
MSS SP-80	(1997) Bronze Gate, Globe, Angle and Check Valves
MSS SP-85	(1994) Cast Iron Globe & Angle Valves, Flanged and Threaded Ends
MSS SP-110	(1996) Ball Valves Threaded, Socket-Welding, Solder Joint, Grooved and Flared Ends

NATIONAL ELECTRICAL MANUFACTURERS ASSOCIATION (NEMA)

NEMA 250	(1997) Enclosures for Electrical Equipment (1000 Volts Maximum)
NEMA ICS 1	(1993) Industrial Controls and Systems
NEMA ICS 2	(1993) Industrial Control and Systems Controllers, Contactors, and Overload Relays Rated Not More Than 2,000 Volts AC or 750 Volts DC
NEMA MG 1	(1998) Motors and Generators
NEMA SM 23	(1991) Steam Turbines for Mechanical Drive Service

NATIONAL FIRE PROTECTION ASSOCIATION (NFPA)

NFPA 37	(1998) Installation and Use of Stationary Combustion Engines and Gas Turbines
NFPA 54	(1996; Errata) National Fuel Gas Code
NFPA 90A	(1996) Installation of Air Conditioning and Ventilating Systems

NFPA 214	(1996) Water-Cooling Towers
NFPA 255	(1996) Method of Test of Surface Burning Characteristics of Building Materials

SOCIETY OF AUTOMOTIVE ENGINEERS (SAE)

SAE J 537	(1996) Storage Batteries

UNDERWRITERS LABORATORIES (UL)

UL 1236	(1994; Rev thru Mar 1999) Battery Chargers for Charging Engine-Starter Batteries

WESTERN WOOD PRODUCTS ASSOCIATION (WWPA)

WWPA Grading Rules	(1999) Western Lumber Grading Rules 95

1.2 SYSTEM DESCRIPTION

This specification section covers the provisions and installation procedures necessary for a complete and totally functional central refrigerated air-conditioning system as defined herein.

1.3 SUBMITTALS

Government approval is required for submittals with a "G" designation; submittals not having a "G" designation are for information only. When used, a designation following the "G" designation identifies the office that will review the submittal for the Government. The following shall be submitted in accordance with Section 01330 SUBMITTAL PROCEDURES:

SD-02 Shop Drawings

Drawings;
Installation;

Drawings, at least 5 weeks prior to beginning construction, shall provide adequate detail to demonstrate compliance with contract requirements. Drawings shall consist of:

a. Equipment layouts which identify assembly and installation details.

b. Piping layouts which identify all valves and fittings.

c. Plans and elevations which identify clearances required for maintenance and operation.

d. Wiring diagrams which identify each component individually and all interconnected or interlocked relationships between components.

e. Foundation drawings, bolt-setting information, and foundation bolts prior to concrete foundation construction for all equipment indicated or required to have concrete foundations.

f. Details, if piping and equipment are to be supported other than as indicated, which include loadings and type of frames, brackets, stanchions, or other supports.

SD-03 Product Data

Refrigeration System; G, RE

Manufacturer's catalog data, at least 5 weeks prior to beginning construction, shall be highlighted to show model No., size, options, performance charts and curves, etc. in adequate detail to demonstrate compliance with contract requirements. Data shall include manufacturer's recommended installation instructions and procedures. Data shall be adequate to demonstrate compliance with contract requirements as specified within the paragraphs:

a. Refrigeration System
b. System Components
c. Accessories
d. Cooling Tower
e. Piping Components

If vibration isolation is specified for a unit, vibration isolator literature shall be included containing catalog cuts and certification that the isolation characteristics of the isolators provided meet the manufacturer's recommendations.

Water Treatment Systems; G, RE

Six complete copies, at least 5 weeks prior to the purchase of the water treatment system, of the proposed water treatment plan including a layout, control scheme, a list of existing make-up water conditions including the items listed in Paragraph Water Analysis, a list of chemicals, the proportion of chemicals to be added, the final treated water conditions, and a description of environmental concerns for handling the chemicals.

Spare Parts;

Spare parts data for each different item of material and equipment specified, after approval of the detail drawings and not later than 3 months prior to the date of beneficial occupancy. The data shall include a complete list of parts and supplies, with source of supply.

Qualifications;

Three copies of qualified procedures, and list of names and identification symbols of qualified welders and welding operators, prior to non-factory welding operations.

Printed Instructions;

Posted instructions, at least 2 weeks prior to construction completion, shall include equipment layout, wiring and control diagrams, piping, valves and control sequences, and typed condensed operation instructions. The condensed operation instructions shall include preventative maintenance procedures, methods of checking the system for normal and safe operation, and

procedures for safely starting and stopping the system. The posted instructions shall be framed under glass or laminated plastic and be posted where indicated by the Contracting Officer.

Verification of Dimensions;

A letter, at least 2 weeks prior to beginning construction, including the date the site was visited, conformation of existing conditions, and any discrepancies found.

Manufacturer's Multi-Year Compressor Warranty;

Manufacturer's multi-year warranty for compressor(s) in air-cooled liquid chillers as specified.

Factory Tests;

Schedules, at least 2 weeks prior to the factory test, which identify the date, time, and location for each test. Schedules shall be submitted for both the Chiller Performance Test and the Chiller Sound Test. The Chiller Performance Test schedule shall also allow the witnessing of the test by a Government Representative.

Tests;

Test schedules, at least 2 weeks prior to the start of related testing, for each of the field tests, the system performance tests, and the condenser water quality tests. The schedules shall identify the date, time, and location for each test.

Demonstrations;

A schedule, at least 2 weeks prior to the date of the proposed training course, which identifies the date, time, and location for the training.

SD-06 Test Reports

Factory Tests;

Six copies of the report shall be provided in bound 216 x 279 mm (8 1/2 x 11 inch) booklets. Reports shall certify the compliance with performance requirements and follow the format of the required testing standard for both the Chiller Performance Tests and the Chiller Sound Tests. Test report shall include certified calibration report of all test instrumentation. Calibration report shall include certification that all test instrumentation has been calibrated within 6 months prior to the test date, identification of all instrumentation, and certification that all instrumentation complies with requirements of the test standard. Test report shall be submitted 1 week after completion of the factory test.

Field Tests;

Six copies of the report shall be provided in bound 216 x 279 mm (8 1/2 x 11 inch) booklets. Reports shall document all phases of tests performed during the Water Pipe Testing, and the Cooling

Tower Tests. The report shall include initial test summaries, all repairs/adjustments made, and the final test results.

System Performance Tests;

Six copies of the report shall be provided in bound 216 x 279 (8 1/2 x 11 inch) booklets. The report shall document compliance with the specified performance criteria upon completion and testing of the system. The report shall indicate the number of days covered by the tests and any conclusions as to the adequacy of the system. The report shall also include the following information and shall be taken at least three different times at outside dry-bulb temperatures that are at least 3 degrees C (5 degrees F) apart:

a. Date and outside weather conditions.
b. The load on the system based on the following:

(1) The refrigerant used in the system.

(2) Condensing temperature and pressure.

(3) Suction temperature and pressure.

(4) Running current, voltage and proper phase sequence for each phase of all motors.

(5) The actual on-site setting of all operating and safety controls.

(6) Chilled water pressure, flow and temperature in and out of the chiller.

(7) The position of the capacity-reduction gear at machine off, one-third loaded, one-half loaded, two-thirds loaded, and fully loaded.

Condenser Water Quality Tests;

Test reports, each month for a period of one year after project completion, in bound 216 x 279 (8 1/2 x 11 inch) booklets. The reports shall identifying the chemical composition of the condenser water. The reports shall also include a comparison of the manufacturer's recommended operating conditions for the cooling tower and condenser in relation to the condition of the condenser water. Any required corrective action shall be documented within the report.

Inspections;

Six copies of an inspection report, at the completion of one year of service, in bound 216 x 279 (81/2 x 11 inch) inch booklets. The report shall identifying the condition of each cooling tower and condenser. The report shall also include a comparison of the condition of the cooling tower and condenser with the manufacturer's recommended operating conditions. The report shall identify all actions taken by the Contractor and manufacturer to correct deficiencies during the first year of service.

SD-07 Certificates

Refrigeration System;

Where the system, components, or equipment are specified to comply with requirements of AGA, NFPA, ARI, ASHRAE, ASME, or UL, 1 copy of proof of such compliance shall be provided. The label or listing of the specified agency shall be acceptable evidence. In lieu of the label or listing, a written certificate from an approved, nationally recognized testing organization equipped to perform such services, stating that the items have been tested and conform to the requirements and testing methods of the specified agency may be submitted. When performance requirements of this project's drawings and specifications vary from standard ARI rating conditions, computer printouts, catalog, or other application data certified by ARI or a nationally recognized laboratory as described above shall be included. If ARI does not have a current certification program that encompasses such application data, the manufacturer may self certify that his application data complies with project performance requirements in accordance with the specified test standards.

SD-10 Operation and Maintenance Data

Operation Manual;

Six complete copies of an operation manual in bound 216 x 279 (81/2 x 11 inch) booklets listing step-by-step procedures required for system startup, operation, abnormal shutdown, emergency shutdown, and normal shutdown at least 4 weeks prior to the first training course. The booklets shall include the manufacturer's name, model number, and parts list. The manuals shall include the manufacturer's name, model number, service manual, and a brief description of all equipment and their basic operating features.

Maintenance Manuals;

Six complete copies of maintenance manual in bound 216 x 279 (81/2 x 11 inch) booklets listing routine maintenance procedures, possible breakdowns and repairs, and a trouble shooting guide. The manuals shall include piping and equipment layouts and simplified wiring and control diagrams of the system as installed.

Water Treatment Systems;

Six complete copies of operating and maintenance manuals for the step-by-step water treatment procedures. The manuals shall include testing procedures used in determining water quality.

1.4 QUALIFICATIONS

Piping shall be welded in accordance with the qualified procedures using performance qualified welders and welding operators. Procedures and welders shall be qualified in accordance with ASME BPV IX. Welding procedures qualified by others, and welders and welding operators qualified by another employer may be accepted as permitted by ASME B31.1. The Contracting Officer shall be notified 24 hours in advance of tests and the tests shall be performed at the work site if practical. The welder or

welding operator shall apply his assigned symbol near each weld he makes as a permanent record. Structural members shall be welded in accordance with Section 05090 WELDING, STRUCTURAL.

1.5 SAFETY REQUIREMENTS

Exposed moving parts, parts that produce high operating temperature, parts which may be electrically energized, and parts that may be a hazard to operating personnel shall be insulated, fully enclosed, guarded, or fitted with other types of safety devices. Safety devices shall be installed so that proper operation of equipment is not impaired. Catwalk, ladder, and guardrail shall be provided where indicated and in accordance with Section 05500 MISCELLANEOUS METAL.

1.6 DELIVERY, STORAGE, AND HANDLING

All equipment delivered and placed in storage shall be stored with protection from the weather, humidity and temperature variations, dirt and dust, or other contaminants.

1.7 PROJECT/SITE CONDITIONS

1.7.1 Verification of Dimensions

The Contractor shall become familiar with all details of the work, verify all dimensions in the field, and shall advise the Contracting Officer of any discrepancy before performing any work.

1.7.2 Drawings

Because of the small scale of the drawings, it is not possible to indicate all offsets, fittings, and accessories that may be required. The Contractor shall carefully investigate the plumbing, fire protection, electrical, structural and finish conditions that would affect the work to be performed and shall arrange such work accordingly, furnishing required offsets, fittings, and accessories to meet such conditions.

PART 2 PRODUCTS

2.1 STANDARD COMMERCIAL PRODUCTS

Materials and equipment shall be standard products of a manufacturer regularly engaged in the manufacturing of such products, which are of a similar material, design and workmanship. The standard products shall have been in satisfactory commercial or industrial use for two years prior to bid opening. The two-year use shall include applications of equipment and materials under similar circumstances and of similar size. The two years experience shall be satisfactorily completed by a product which has been sold or is offered for sale on the commercial market through advertisements, manufacturer's catalogs, or brochures. Products having less than a two-year field service record shall be acceptable if a certified record of satisfactory field operation, for not less than 6000 hours exclusive of the manufacturer's factory tests, can be shown. All products shall be supported by a service organization. The Contractor shall submit a certified list of qualified permanent service organizations for support of the equipment which includes their addresses and qualifications. These service organizations shall be reasonably convenient to the equipment installation and shall be able to render satisfactory

service to the equipment on a regular and emergency basis during the warranty period of the contract.

2.2 NAMEPLATES

Each major component of equipment shall have the manufacturer's name, address, type or style, and catalog or serial number on a plate securely attached to the item of equipment. As a minimum, nameplates shall be provided for:

a. Liquid-Chilling Package(s)
b. Compressor(s)
c. Compressor Driver(s)
d. Condenser(s)
e. Liquid Cooler(s)
f. Receiver(s)
g. Pump(s)
h. Pump Motor(s)
i. Cooling Tower(s)
j. Cooling Tower Gear Drive Assemblies
k. Refrigerant Leak Detectors
l. Heat Exchangers
m. Expansion Tanks
n. Air Separator Tanks
o. Side Stream Filters

2.3 ELECTRICAL WORK

Electrical equipment, motors, motor starters, and wiring shall be in accordance with Section 16415 ELECTRICAL WORK, INTERIOR. Electrical motor driven equipment specified shall be provided complete with motors, motor starters, and controls. Electrical characteristics and enclosure type shall be as shown, and unless otherwise indicated, all motors of 745 W (1 horsepower) and above with open, dripproof, or totally enclosed fan cooled enclosures, shall be high efficiency type. Field wiring shall be in accordance with manufacturer's instructions. Each motor shall conform to NEMA MG 1 and be of sufficient size to drive the equipment at the specified capacity without exceeding the nameplate rating of the motor. Motors shall be continuous duty with the enclosure specified. Motor starters shall be provided complete with thermal overload protection and other appurtenances necessary for the motor control indicated. Motors shall be furnished with a magnetic across-the-line or reduced voltage type starter as required by the manufacturer. Motor starter shall be provided in enclosures constructed in accordance with UL and NEMA 3R enclosures. Manual or automatic control and protective or signal devices required for the operation specified and any control wiring required for controls and devices specified, but not shown, shall be provided.

2.4 SELF-CONTAINED LIQUID CHILLER

Unless necessary for delivery purposes, units shall be assembled, leak-tested, charged (refrigerant and oil), and adjusted at the factory. In lieu of delivery constraints, a chiller may be assembled, leak-tested, charged (refrigerant and oil), and adjusted at the job site by a factory representative. Unit components delivered separately shall be sealed and charged with a nitrogen holding charge. Unit assembly shall be completed in strict accordance with manufacturer's recommendations. Chiller shall operate within capacity range and speed recommended by the manufacturer. Parts weighing 23 kg or more which must be removed for inspection,

cleaning, or repair, such as motors, gear boxes, cylinder heads, casing tops, condenser, and cooler heads, shall have lifting eyes or lugs. Chiller shall be provided with factory installed insulation on surfaces subject to sweating including the liquid cooler, suction line piping, economizer, and cooling lines. Chiller shall include all customary auxiliaries deemed necessary by the manufacturer for safe, controlled, automatic operation of the equipment. Chiller shall be provided with a single point wiring connection for incoming power supply. Factory installed insulation shall be provided on all suction piping from the evaporator to the compressor and on the liquid cooler shell. Where motors are the gas-cooled type, factory installed insulation shall be provided on the cold-gas inlet connection to the motor per manufacturer's standard practice. Chiller's condenser and liquid cooler shall be provided with marine water boxes with flanged connections.

2.4.1 Centrifugal or Rotary Screw Type

Centrifugal chiller shall be constructed and rated in accordance with ARI 550. Rotary screw chiller shall be constructed and rated in accordance with ARI 550 or ARI 590 as applicable. Chiller shall have a minimum full load COP rating of 6.3 and a part load COP rating of 6.7 in accordance with ARI 550 or ARI 590 as applicable. Chiller shall conform to ASHRAE 15. As a minimum, chiller shall include the following components as defined in paragraph CHILLER COMPONENTS.

a. Refrigerant and oil
b. Structural base
c. Controls package
d. Centrifugal or rotary screw compressor
e. Compressor driver, electric motor
f. Compressor driver connection
g. Liquid cooler (evaporator)
h. Water cooled condenser coil
i. Receiver
j. Purge system for chillers which operate below atmospheric pressure
k. Tools

2.5 CHILLER COMPONENTS

2.5.1 Refrigerant and Oil

Refrigerants shall be one of the fluorocarbon gases. Refrigerants shall have number designations and safety classifications in accordance with ASHRAE 34. Refrigerants shall meet the requirements of ARI 700 as a minimum. Refrigerants shall have an Ozone Depletion Potential (ODP) of less than or equal to 0.05.

2.5.2 Structural Base

Chiller and individual chiller components shall be provided with a factory-mounted welded structural steel base or support legs. Chiller and individual chiller components shall be isolated from the building structure by means of vibration isolators with published load ratings. Vibration isolators shall have isolation characteristics as recommended by the manufacturer for the unit supplied and the service intended.

2.5.3 Chiller Refrigerant Circuit

Chiller refrigerant circuit shall be completely piped and factory leak

tested. For multicompressor units, not less than 2 independent refrigerant circuits shall be provided. Circuit shall include as a minimum a combination filter and drier, combination sight glass and moisture indicator, liquid-line solenoid valve for reciprocating or scroll units, an electronic or thermostatic expansion valve with external equalizer, charging ports, compressor service valves, and superheat adjustment.

2.5.4 Controls Package

Chiller shall be provided with a complete factory mounted and prewired electric or microprocessor based control system. Controls package shall be unit-mounted which contains as a minimum a digital display or acceptable gauges, an on-auto-off switch, motor starters, power wiring, control wiring, and disconnect switches. Controls package shall provide operating controls, monitoring capabilities, programmable setpoints, safety controls, and EMCS interfaces as defined below.

2.5.4.1 Operating Controls

Chiller shall be provided with the following adjustable operating controls as a minimum.

a. Leaving chilled water temperature control

b. Adjustable timer to prevent compressor from short cycling

c. Automatic lead/lag controls (adjustable) for multiprocessor units

d. Load limiting

e. System capacity control to adjust the unit capacity in accordance with the system load and the programmable setpoints. Controls shall automatically re-cycle the chiller on power interruption.

2.5.4.2 Monitoring Capabilities

During normal operations, the control system shall be capable of monitoring and displaying the following operating parameters. Access and operation of display shall not require opening or removing any panels or doors.

a. Entering and leaving chilled water temperatures
b. Self diagnostic
c. Operation status
d. Operating hours
e. Number of starts
f. Compressor status (on or off)
g. Refrigerant discharge and suction pressures
h. Condenser water entering and leaving temperatures
i. Number of purge cycles over the last 7 days

2.5.4.3 Programmable Setpoints

The control system shall be capable of being reprogrammed directly at the unit. No parameters shall be capable of being changed without first entering a security access code. The programmable setpoints shall include the following as a minimum.

a. Leaving Chilled Water Temperature
b. Leaving Condenser Water Temperature

c. Time Clock/Calender Date

2.5.4.4 Safety Controls with Manual Reset

Chiller shall be provided with the following safety controls which automatically shutdown the chiller and which require manual reset.

a. Low chilled water temperature protection
b. High condenser refrigerant discharge pressure protection
c. Low suction pressure protection
d. Chilled water flow detection
e. Motor current overload and phase loss protection
f. High motor winding temperature protection for hermetic motors
g. Low oil flow protection

2.5.4.5 Safety Controls with Automatic Reset

Chiller shall be provided with the following safety controls which automatically shutdown the chiller and which provide automatic reset.

a. Over/under voltage protection
b. Phase reversal protection
c. Chilled water flow interlock

2.5.4.6 Remote Alarm

During the initiation of a safety shutdown, the control system shall be capable of activating a remote alarm bell. In coordination with the chiller, the contractor shall provide an alarm circuit (including transformer if applicable) and a minimum 100 mm (4 inch) diameter alarm bell. Alarm circuit shall activate bell in the event of machine shutdown due to the chiller's monitoring of safety controls. The alarm bell shall not sound for a chiller that uses low-pressure cutout as an operating control.

2.5.4.7 Energy Management Control System (EMCS) Interface

The control system shall be capable of communicating all data to a remote integrated DDC processor through a single shielded cable. The data shall include as a minimum all system operating conditions, capacity controls, and safety shutdown conditions. The control system shall also be capable of receiving at a minimum the following operating commands.

a. Remote Unit Start/Stop
b. Remote Chilled Water Reset
c. Remote Condenser Water Reset

2.5.5 Compressor(s)

2.5.5.1 Rotary Screw Compressor(s)

Compressors shall operate stably for indefinite time periods at any stage of capacity reduction without hot-gas bypass. Provision shall be made to insure proper lubrication of bearings and shaft seals on shutdown with or without electric power supply. Rotary screw compressors shall include:

a. An open or hermetic, positive displacement, oil-injected design directly driven by the compressor driver. Compressor shall allow access to internal compressor components for repairs, inspection,

and replacement of parts.

b. Rotors which are solid steel forging with sufficient rigidity for proper operation.

c. A maximum rotor operating speed no greater than 3600 RPM.

d. Casings of cast iron, precision machined for minimal clearance about periphery of rotors.

e. A lubrication system of the forced-feed type that provides oil at the proper pressure to all parts requiring lubrication.

f. Shaft main bearings of the sleeve type with heavy duty bushings or rolling element type in accordance with AFBMA Std 9 or AFBMA Std 11. Bearings shall be conservatively loaded and rated for an L(10) life of not less than 200,000 hours.

g. A differential oil pressure or flow cutout to allow the compressor to operate only when the required oil pressure or flow is provided to the bearings.

h. A temperature- or pressure-initiated, hydraulically actuated, single-slide-valve, capacity-control system to provide minimum automatic capacity modulation from 100 percent to 25 percent.

i. An oil separator and oil return system to remove oil entrained in the refrigerant gas and automatically return the oil to the compressor.

j. Crankcase oil heaters controlled as recommended by the manufacturer.

2.5.5.2 Centrifugal Compressor(s)

Centrifugal compressors shall be single or multistage, having dynamically balanced impellers, either direct or gear driven by the compressor driver. Impellers shall be over-speed tested at 1.2 times the impeller-shaft speed. Impeller shaft shall be heat-treated alloy steel with sufficient rigidity for proper operation at any required operating speed. Centrifugal compressors shall include:

a. Shaft main bearings that are the rolling element type in accordance with AFBMA Std 9 or AFBMA Std 11, journal type with bronze or babbitt liners, or of the aluminum-alloy one-piece insert type. Bearings shall be rated for an L(10) life of not less than 200,000 hours.

b. Casing of cast iron, aluminum, or steel plate with split sections gasketed and bolted or clamped together.

c. Lubrication system of the forced-feed type that provides oil at the proper pressure to all parts requiring lubrication.

d. Provisions to ensure proper lubrication of bearings and shaft seals prior to starting and upon stopping with or without electric power supply. On units providing forced-feed lubrication prior to starting, a differential oil pressure cutout interlocked with the compressor starting equipment shall allow the compressor to

operate only when the required oil pressure is provided to the bearings.

e. Oil sump heaters controlled as recommended by the manufacturer.

f. Temperature-or pressure-actuated prerotation vane or suction damper to provide automatic capacity modulation from 100 percent capacity to 10 percent capacity. If operation to 10 percent capacity cannot be achieved without providing hot-gas bypass, then the Contractor shall indicate in the equipment submittal the load percent at which hot gas bypass is required.

2.5.6 Compressor Driver, Electric Motor

Motor shall be the polyphase, induction type conforming to NEMA MG 1. Motors shall be suitable for use with the indicated electrical power characteristics and the type of starter provided. Motor starters shall be the reduced voltage, closed-transition type conforming to NEMA ICS 1 and NEMA ICS 2. Motor starter shall be unit mounted or remote mounted as indicated with starter type, wiring, and accessories coordinated by the chiller manufacturer. Starter shall be able to operate in temperatures up to 49 degrees C (120 degrees F).

2.5.7 Compressor Driver Connections

Each compressor shall be driven by a V-belt drive or direct connected through a flexible coupling, except that flexible coupling is not required on hermetic units. V-belt drives shall be designed for not less than 150 percent of the driving motor capacity. Flexible couplings shall be of the type that does not require lubrication.

2.5.8 Liquid Cooler (Evaporator)

Cooler shall be of the shell-and-coil or shell-and-tube type design. Condenser's refrigerant side shall be designed and factory pressure tested to comply with ASHRAE 15. Condenser's water side shall be designed and factory pressure tested for not less than 1,000 kPa. Cooler shell shall be constructed of seamless or welded steel. Coil bundles shall be totally removable and arranged to drain completely. Tubes shall be seamless copper, plain, integrally finned with smooth bore or integrally finned with enhanced bore. Each tube shall be individually replaceable. Tubes shall be installed into carbon mild steel tube sheets by rolling. Tube baffles shall be properly spaced to provide adequate tube support and cross flow. Performance shall be based on a water velocity not less than 0.91 m/s (3 fps) nor more than 3.7 mm (12 fps) and a fouling factor of 0.000044.

2.5.9 Water-Cooled Condenser Coil

Condenser shall be of the shell-and-coil or shell-and-tube type design. Condenser's refrigerant side shall be designed and factory pressure tested to comply with ASHRAE 15. Condenser's water side shall be designed and factory pressure tested for not less than 1,000 kPa. Condensers shall be complete with pressure relief valve or rupture disk, water drain connections, and refrigerant charging valve. Low pressure refrigerant condenser shall be provided with a purge valve located at the highest point in the condenser to purge non-condensibles trapped in the condenser. Condenser shell shall be constructed of seamless or welded steel. Coil bundles shall be totally removable and arranged to drain completely. Tubes shall be seamless copper, plain, integrally finned with smooth bore or

integrally finned with enhanced bore. Each tube shall be individually replaceable, except for the coaxial tubes. Tube baffles shall be properly spaced to provide adequate tube support and cross flow. Performance shall be based on water velocities not less than 0.91 m/s (3 fps) nor more than 3.7 mm (12 fps) and a fouling factor of 0.000044.

2.5.10 Receivers

Liquid receivers not already specified herein as an integral factory-mounted part of a package, shall be designed, fitted, and rated in accordance with the recommendations of ARI 495, except as modified herein. Receiver shall bear a stamp certifying compliance with ASME BPV VIII Div 1 and shall meet the requirements of ASHRAE 15. Inner surfaces shall be thoroughly cleaned by sandblasting or other approved means. Each receiver shall have a storage capacity not less than 20 percent in excess of that required for the fully-charged system. Each receiver shall be equipped with inlet, outlet drop pipe, drain plug, purging valve, relief valves of capacity and setting required by ASHRAE 15, and two bull's eye liquid-level sight glasses. Sight glasses shall be in the same vertical plane, 90 degrees apart, perpendicular to the axis of the receiver, and not over 75 mm horizontally from the drop pipe measured along the axis of the receiver. In lieu of bull's eye sight glass, external gauge glass with metal glass guard and automatic closing stop valves may be provided.

2.5.11 Chiller Purge System

Chillers which operate at pressures below atmospheric pressure shall be provided with a purge system that operates independently of the chiller. Purge system shall automatically remove air, water vapor, and non-condensible gases from the chiller's refrigerant. Purge system shall condense, separate, and return all refrigerant back to the chiller. An oil separator shall be provided with the purge system if required by the manufacturer. Purge system shall not discharge to occupied areas, or create a potential hazard to personnel. Purge system shall include a purge pressure gauge, number of starts counter, and an elapsed time meter. Purge system shall include lights or an alarm which indicate excessive purge or an abnormal air leakage into chiller.

2.5.12 Tools

One complete set of special tools as recommended by the manufacturer for field maintenance of the system shall be provided. Tools shall be mounted on a tool board in the equipment room or contained in a toolbox as directed by the Contracting Officer.

2.6 ACCESSORIES

2.6.1 Pumps

Pumps shall be the electrically driven, non-overloading, centrifugal type which conform to HI 1.1-1.5. Pump capacity, efficiency, motor size, and impeller type shall be as indicated on the drawings. Pumps shall be selected at or near peak efficiency. Pump curve shall rise continuously from maximum capacity to shutoff. Pump motor shall be totally enclosed and have sufficient wattage (horsepower) for the service required. Each pump motor shall be equipped with an across-the-line magnetic controller in a NEMA 250, Type 1 enclosure with "START-STOP" switch in the cover.

2.6.1.1 End Suction and Double Suction Pumps

Shaft seal shall be mechanical-seal tpye for end suction pump and mechanical-seal or stuffing-box type for double suction pump. Impeller shall be statically and dynamically balanced. Each pump casing shall be designed to withstand the discharge head specified plus the static head on system plus 50 percent of the total, but not less than 862 kPa (125 psig). Pump casing and bearing housing shall be close grained cast iron. High points in the casing shall be provided with manual air vents; low points shall be provided with drain plugs. Impeller, impeller wearing rings, glands, casing wear rings, and shaft sleeve shall be bronze. Shaft shall be carbon or alloy steel, turned and ground. Bearings shall be ball-bearings, roller-bearings, or oil-lubricated bronze-sleeve type bearings, and be efficiently sealed or isolated to prevent loss of oil or entrance of dirt or water. Pump and motor shall be mounted on a common cast iron base having lipped edges and tapped drainage openings or structural steel base with lipped edges or drain pan and tapped drainage openings. Pump shall be provided with shaft coupling guard. Close coupled pumps shall be provided with drip pockets and tapped openings. Pump motor shall have the required capacity to prevent overloading with pump operating at any point on its characteristic curve. Pump speed shall not exceed 3,600 rpm, except where the pump head is less than 180 kPa, the pump speed shall not exceed 1,750 rpm. Pump shall be accessible for servicing without disturbing piping connections.

2.6.1.2 Mechanical Shaft Seals

Seals shall be single, inside mounted, end-face-elastomer bellows type with stainless steel spring, brass or stainless steel seal head, carbon rotating face, and tungsten carbide or ceramic sealing face. Glands shall be bronze and of the water-flush design to provide lubrication flush across the face of the seal. Bypass line from pump discharge to flush connection in gland shall be provided, with filter or cyclone separator in line.

2.6.1.3 Stuffing-Box Type Seals

Stuffing box shall include minimum 4 rows of square, impregnated TFE (Teflon) or graphite cord packing and a bronze split-lantern ring. Packing gland shall be bronze interlocking split type.

2.6.1.4 In-line Pumps

In-line pump hsall be non-overloading centrifugal type and have a capacity not less than indicated. Casing and bearing houseings shall be cast iron or cast steel. Shaft seal shall be constructed of corrosion-resistant alloy steel, sleeve bearings and glands of bronze designed to accommodate a mechanical seal, and the housing of close-grained cast iron. The motor shall have sufficient power for the service required, shall be of a type approved by the manufacturer of the pump, and shall be suitable for the available electric service. The pump discharge header shall be provided with a pressure switch. Pressure switch unit shall be a self-contained snap action type to indicate fluid pressure. Switch shall be a SPDT with 120-volt, 15-ampere rating.

2.6.2 Expansion Tanks

Expansion tanks shall be welded steel, constructed, tested and stamped in accordance with ASME BPV VIII Div 1 for a working pressure of 862 kPa (125 psig) and precharged to the minimum operating pressure. Expansion tanks shall have a replaceable diaphragm and be the captive air type. Tanks

shall accommodate expanded water of the system generated within the normal operating temperature range, limiting this pressure increase at all components in the system to the maximum allowable pressure at those components. Each tank air chamber shall be fitted with an air charging valve. Tanks shall be supported by steel legs or bases for vertical installation or steel saddles for horizontal installations. The only air in the system shall be the permanent sealed-in air cushion contained within the expansion tank.

2.6.3 Air Separator Tanks

External air separation tank shall be steel, constructed, tested, and stamped in accordance with ASME BPV VIII Div 1 for a working pressure of 862 kPa (125 psig).

2.6.4 Refrigerant Leak Detector

Detector shall be the continuously-operating, halogen-specific type. Detector shall be appropriate for the refrigerant in use. Detector shall be specifically designed for area monitoring and shall include sampling points installed where indicated. Detector design and construction shall be compatible with the temperature, humidity, barometric pressure and voltage fluctuations of the operating area. Detector shall have an adjustable sensitivity such that it can detect refrigerant at or above 3 parts per million (ppm). Detector shall be supplied factory-calibrated for the appropriate refrigerant(s). Detector shall be provided with an alarm relay output which energizes when the detector detects a refrigerant level at or above the TLV-TWA (or toxicity measurement consistent therewith) for the refrigerant(s) in use. The detector's relay shall be capable of initiating corresponding alarms and ventilation systems as indicated on the drawings. Detector shall be provided with a failure relay output that energizes when the monitor detects a fault in its operation.

2.6.5 Refrigerant Relief Valve/Rupture Disc Assembly

The assembly shall be a combination pressure relief valve and rupture disc designed for refrigerant usage. The assembly shall be in accordance with ASME BPV IX and ASHRAE 15. The assembly shall be provided with a pressure gauge assembly which will provide local indication if a rupture disc is broken. Rupture disc shall be the non-fragmenting type.

2.6.6 Refrigerant Signs

Refrigerant signs shall be a medium-weight aluminum type with a baked enamel finish. Signs shall be suitable for indoor or outdoor service. Signs shall have a white background with red letters not less than 12 mm in height.

2.6.6.1 Installation Identification

Each new refrigerating system shall be provided with a refrigerant sign which indicates the following as a minimum:

a. Contractor's name.
b. Refrigerant number and amount of refrigerant.
c. The lubricant identity and amount.
d. Field test pressure applied.

2.6.6.2 Controls and Piping Identification

Refrigerant systems containing more than 50 kg of refrigerant shall be provided with refrigerant signs which designate the following as a minimum:

a. Valves or switches for controlling the refrigerant flow, the ventilation system, and the refrigerant compressor(s).

b. Pressure limiting device(s).

2.6.7 Automatic Tube Brush Cleaning System

2.6.7.1 Brush and Basket Sets

One brush and basket set (one brush and two baskets) shall be furnished for each condenser tube. Brushes shall be made of nylon bristles, with titanium wire. Baskets shall be polypropylene.

2.6.7.2 Flow-Diverter Valve

Each system shall be equipped with one flow-diverter valve specifically designed for the automatic tube brush cleaning system and have parallel flow connections. The flow-diverter valve shall be designed for a working pressure of 1,000 kPa (150 psig). End connections shall be flanged. Each valve shall be provided with an electrically operated air solenoid valve and position indicator.

2.6.7.3 Control Panel

The control panel shall provide signals to the diverter valve at a preset time interval to reverse water flow to drive the tube brushes down the tubes and then signal the valve to reverse the water flow to drive the brushes back down the tubes to their original position. The controller shall have the following features as a minimum:

a. Timer to initiate the on-load cleaning cycle.
b. Manual override of preset cleaning cycle.
c. Power-on indicator.
d. Diverter-position indicator.
e. Cleaning-cycle-time adjustment
f. Flow-switch bypass.

2.6.8 VARIABLE FREQUENCY DRIVE UNITS

Units shall be solid state with adjustable frequency and voltage, three-phase output capable of driving standard NEMA class B induction motors. The drives shall utilize diode bridge rectifying circuitry with either variable voltage or pulse width modulation DC to AC convertors. Silicon controlled rectifiers (SCR) that are phased back shall not be used in rectifying circuitry. The drives shall be designed to be used on variable torque loads and shall be capable of providing sufficient torque to allow the motor to break away from rest upon first application of power. Unit shall be rated for 60 Hz, three-phase systems, capable of operating within voltage parameters of plus 10 to minus 15 percent of rated line voltage, and be rated for the full load amps of the maximum HP within its class. Each unit shall be factory tested at maximum HP, rated full load current and at an ambient of 40 degrees C for a period of not less than 24 hours. If a component fails, it shall be replaced and the test restarted for the full time period. The unit shall not add any current or voltage transients to the input AC power distribution system nor shall the

controller be affected by transients from other devices on the AC power distribution system. Unit shall be protected to comply with ANSI C37.90.1, Guide for Surge Withstand Capability (SWC) Test (2,500 volts for 1 minute) and UL 508 Electrical Industrial Control Equipment

2.6.8.1 Variable Frequency Drive Unit Features

Variable frequency drive units shall have the following features:

a. Isolated power for control circuits.
b. Manually resettable motor overload protection for each phase.
c. Adjustable current limiting circuitry to provide soft motor starting. Maximum starting current shall not exceed 200 percent of motor full load current.
d. Independent acceleration and deceleration time adjustment, manually adjustable from 2 to 30 seconds. Set timers to the equipment manufacturer's recommended time in the above range.
e. Provide 4 to 20 mA current follower circuitry for interface with pressure sensor and transmitter devices.
f. Automatic frequency adjustment from 20 Hz to 60 Hz.
g. By-pass starter with circuitry to protect and isolate the variable speed controller. When the variable speed controller is in the by-pass mode the solid-state components shall be isolated from the power supply on both the line and motor side.
h. Controller efficiency at any speed shall be not less than 92 percent.
i. At 100 percent speed the input power factor shall be less than 0.95 and shall not be less than 0.90 at any other speed.
j. Door interlocked fused safety disconnect or door interlocked circuit breaker switch shall disconnect all input power.
k. Two N.O. and two N.C. dry contacts rated 120 volts, 10 amperes, 60 Hz for remote indication of the following: controller system shutdown with auto restart, system shutdown without auto restart, and system running.
l. Limit harmonic distortion produced by the unit to no more than 3 percent voltage at 100 percent current at any speed.

2.6.8.2 Controllers

Controllers shall have circuitry to initiate an orderly shutdown after the motor stops spinning and when conditions are corrected. The controller shall not be damaged by the following electrical disturbances:

a. Incorrect phase sequence.
b. Single phasing.
c. Over voltage in excess of 10 percent.
d. Under voltage in excess of 15 percent.
e. Running over current above 150 percent (shall not automatically reset for this condition).
f. Instantaneous over current above 150 percent (shall not automatically reset for this condition)
g. Surge voltage in excess of 1,000 volts.
h. Short duration power outages of 12 cycles or less (i.e. distribution line switching, generator testing, automatic transfer switch operations).

2.6.8.3 Accessories

Units shall have the following door-mounted accessories:

a. AC Power light.
b. Ammeter (RMS motor current).
c. Hand-Off-Automatic switch.
d. Manual speed HAND mode.
e. System protection light indicating that the system has a shutdown and will not automatically restart.
f. System protection light indicating that the system has shutdown, but will restart when conditions return to normal.
g. Manual variable speed controller by-pass switch when required.
h. Diagnostic shutdown indicator lights for each shutdown condition Sound power level of AHU fan shall be as scheduled.

2.6.9 HEAT EXCHANGER

Heat exchanger shall be plates and frame type. Plates, frames and gaskets shall be designed for a working pressure of 1.0 MPa (150 psig) and factory tested at 2.0 MPa (300 psig). Water and pressure relief valve connections shall be located in accordance with the manufacturer's standard practice. Connections shall be ASME 1.0 MPa (150 pound) flanged. Water pressure drop through clean plates and headers shall not exceed 75 kPa (10.9 psi) at the flow rates and temperatures indicated. Plates shall be designed to assure turbulent flow at a rate of 108.6 L/second through any 2 plate segment. Plates shall be corrugated Type 304 stainless steel, Type 316 stainless steel or nickel-iron-chromium alloy conforming to ASTM B 424 .

2.6.10 Field Installed Insulation

Field installed insulation shall be as specified in Section 15080 THERMAL INSULATION FOR MECHANICAL SYSTEMS, except for header and waterbox insulation which shall be flexible cellular insulation in accordance with ASTM C 534, Type I.

2.6.11 Gaskets

Gaskets shall conform to ASTM F 104 - classification for compressed sheet with nitrile binder and acrylic fibers for maximum 371 degrees C (700 degrees F) service.

2.6.12 Bolts and Nuts

Bolts and nuts, except as required for piping applications, shall be in accordance with ASTM A 307. The bolt head shall be marked to identify the manufacturer and the standard with which the bolt complies in accordance with ASTM A 307.

2.7 COOLING TOWER

2.7.1 Fire Safety

Towers shall conform to NFPA 214. Fire hazard rating for plastic impregnated materials shall not exceed 25. Plastics shall not drip or run during combustion. Determine ratings by ASTM E 84 or NFPA 255.

2.7.2 Zinc-Coated Steel

Components fabricated of zinc-coated steel shall be not lighter than 16 gauge steel, protected against corrosion by a zinc coating. The zinc coating shall conform to ASTM A 153/A 153M and ASTM A 123/A 123M, as

applicable and have an extra heavy coating of not less than 0.76 kg per square meter (2-1/2 ounces per square foot) of surface. Galvanized surfaces damaged due to welding shall be coated with zinc rich coating conforming to ASTM D 520, Type 1.

2.7.3 Polyvinyl Chloride (PVC) Formed Sheets

ASTM D 1784, Type I, Grade 1 with a flame spread rating of 15 or less per ASTM E 84.

2.7.4 Hardware

Bolts shall be cadmium-plated, zinc-coated steel, or Type 304 stainless steel. Each bolt shall be provided with neoprene and cadmium-plated steel washers under the heads. Nails shall be silicon bronze, commercial bronze, or stainless steel. Hardware shall meet the salt-spray fog test as defined by ASTM B 117.

2.7.5 Conventional Type Tower

Each tower shall be the induced mechanical draft, counterflow or crossflow [AM#0004], factory fabricated, factory-assembled type.

2.7.5.1 Casing

Casing shall be constructed of zinc-coated steel or Type 304 stainless steel. Towers shall be designed and constructed to withstand a wind pressure of not less than 1.4 KPa (30 pound-force per square foot (psf) on external surfaces. Fan decks shall be designed to withstand a live load of not less than 1.9 kPa (40 psf) in addition to the concentrated or distributed loads of equipment mounted on the fan decks.

2.7.5.2 Cold-Water Basin

Basin shall be completely watertight and constructed of Type 304 stainless steel. Basin shall be constructed and installed to ensure that air will not be entrained in outlets when operating and no water will overflow on shutdown. Each individual sump shall be provided with an individual outlet. Each outlet shall be provided with a 1/2 inch mesh, zinc-coated steel wire securely mounted to prevent trash from entering the outlet. Each basin shall be provided with overflow and valved drain connections. Each basin shall be provided with a float-controlled, makeup water valve as indicated. The makeup water shall discharge not less than 50 mm or two pipe diameters, whichever is greater, above the top of the basin.

2.7.5.3 Hot-Water Distribution

Design water distribution systems for each cell of each tower so that a water flow of 140 percent of specified water flow will not cause overflowing or splashing. Water distribution systems shall be accessible and permit flexibility of operation. Provide removable covers of same material and thickness as casing for entire water distribution basin. Support covers by basin sides with top of cover flush with top of basin. Provide separate regulation and stop valves for complete balancing and complete shutoff from each cell. Systems shall be self-draining and nonclogging. The water distribution system shall be either one of the following types.

a. Open Basins: Basins shall be provided with a splash box or

baffles to minimize splashing of incoming hot water, holes that evenly distribute the water over the entire decking area, and a basin cover. Holes used in a water basin shall be provided with ceramic or plastic orifice inserts.

b. Spray Nozzles: Spray nozzles shall be cleanable; stainless steel, bronze, or high-impact plastic, nonclogging, removable; and, spaced for even distribution.

2.7.5.4 Fill Material

The fill shall be PVC formed sheets arranged in a honeycomb or waveform configuration. Zinc-coated steel shall have a minimum of 765 g per square meter of surface. Fill material shall be free to expand or contract without warping. No plasticized wood cellulose shall be provided for fill material. Fill shall be removable or otherwise made accessible for cleaning. Provide space supports as required to prevent sagging and misalignment, and provide for an even mixing of air and water.

2.7.5.5 Drift Eliminator

Provide in tower outlet to limit drift loss to not over 0.02 percent of specified water flow. Eliminators shall be constructed of not less than 10 mm (3/8 inch) polyvinyl chloride (PVC).

2.7.5.6 Framework and Equipment Supports

Framework and equipment supports shall be zinc-coated steel or Type 304 stainless steel. Materials provided for framework, casings and equipment supports shall be compatible.

2.7.5.7 Structural Supports

Structural supports shall be provided in accordance with the recommendations of the manufacturer of the tower unless otherwise indicated.

2.7.5.8 Foundations

Cooling tower foundations shall meet the requirements of the cooling tower manufacturer and be as indicated. Foundation design shall be based on the load conditions and soil bearing value indicated. Foundation calculations shall be submitted with the equipment drawings.

2.7.6 Louvers

Air inlets for each cooling tower shall be provided with individually removable louvers arranged to prevent the escape of water. Louvers shall be zinc-coated steel or Type 304 stainless steel. Materials provided for casings and louvers shall be compatible; one material shall not produce stains upon the other. Air intakes shall be provided with 25 mm zinc-coated steel mesh.

2.7.7 Fans

Fans shall be heavy duty axial propeller type, constructed of zinc-coated steel, Type 304 stainless steel, aluminum or an aluminum alloy, or FRP. Propeller type shall have a maximum tip speed of 55 m (11,000 fpm). Fan blade assembly shall be both statically and dynamically balanced after assembly of the cooling tower. Fan hub shall be constructed of zinc-coated

steel, stainless steel or cast aluminum with adequate surface protection against corrosion. Complete fan assembly (fan and mounting) shall be designed to give maximum fan efficiency and long life when handling saturated air at high velocities.

2.7.8 Drive Shaft

Drive shafts shall be the full floating type with flexible couplings at both ends and have a service factor of 1.0 or greater. Drive shafts shall be of stainless steel, fitted each end with flexible couplings (stainless steel plate type). Each drive shaft shall be provided with a galvanized steel guard, to prevent damage to surrounding equipment in case of shaft failure. Provision shall be made for lubrication of all bearings. Bearings shall be accessible to the extent that each bearing can be lubricated without dismantling fan.

2.7.9 Fan Motor

Each motor shall be a single speed, totally enclosed, insulation Class B, NEMA Design B, continuous-rated, and conforming to NEMA MG 1. Fan motors shall have totally enclosed enclosures and be located outside the discharge airstream. Motors shall be mounted according to manufacturer's recommendations.

2.7.10 Stairways and Ladders

Provide stairs, 60-degree ship ladders or straight-rung ladders of standard design, starting at ground level and extending as high as required to gain access to fan decks and water distribution systems. Stairways and ladders shall be hot-dip, zinc-coated steel. Ladders higher than 3.66 meters (12 feet) shall have a safety cage.

2.7.11 Handrailings

Steel handrailings shall be not less than 1067 mm (42 inches) high around the exterior of each working surface that is 3.66 m (12 feet) or more above the ground, or other supporting construction. Railings shall be not smaller than 32 mm (1-1/4 inch) zinc-coated steel pipe with standard zinc-coated steel railing.

2.7.12 Access Doors

Each tower shall be provided with access doors at grade level to provide entry to the interior for service maintenance without removal of the fill. Doors shall be provided with doors on each endwall of each cooling tower cell. Frame and brace access doors to prevent damage when opening and closing. Doors shall be located adjacent to float controls.

2.8 WATER TREATMENT SYSTEMS

When water treatment is specified, the use of chemical-treatment products containing hexavalent chromium (Cr) is prohibited.

2.8.1 Water Analysis

Conditions of make-up water to be supplied to the condenser and chilled water systems shall be obtained by the Contractor as required to provide the water treatment system as specified.

2.8.2 Chilled and Condenser Water

Water to be used in the chilled and condenser water systems shall be treated to maintain the conditions recommended by this specification as well as the recommendations from the manufacturers of the condenser and evaporator coils. Chemicals shall meet all required federal, state, and local environmental regulations for the treatment of evaporator coils and direct discharge to the sanitary sewer.

2.8.3 Water Treatment Services

The services of a company regularly engaged in the treatment of condenser and chilled water systems shall be used to determine the correct chemicals required, the concentrations required, and the water treatment equipment sizes and flow rates required. The company shall maintain the chemical treatment and provide all chemicals required for the condenser and chilled water systems for a period of 1 year from the date of occupancy. The chemical treatment and services provided over the 1 year period shall meet the requirements of this specification as well as the recommendations from the manufacturers of the condenser and evaporator coils. Acid treatment and proprietary chemicals shall not be used.

2.8.4 Chilled Water Distribution System

Filter/strainer vessel provided on the close loop, chilled water distribution system as indicated and specified shall be used as chemical feeder to feed chemical into the system.

2.8.5 Open Loop Chilled Water and Condenser Water

The water treatment system shall be capable of automatically feeding chemicals and bleeding the system to prevent corrosion, scale, and biological formations. Automatic chemical feed systems shall automatically feed chemicals into the condenser water based on varying system conditions.

2.8.5.1 Chemical Feed Pump

One pump shall be provided for each chemical feed tank. The chemical feed pumps shall be positive displacement diaphragm type. The flow rate of the pumps shall be adjustable from 0 to 100 percent while in operation. The discharge pressure of pumps shall not be less than 1.5 times the line pressure at the point of connection. The pumps shall be provided with a pressure relief valve and a check valve mounted in the pump discharge.

2.8.5.2 Tanks

Two chemical tanks shall be provided. The tanks shall be constructed of high density polyethylene or stainless steel with a hinged cover. The tanks shall have sufficient capacity to require recharging only once per 7 days during normal operation. A level indicating device shall be included with each tank. An electric agitator shall be provided for each tank.

2.8.5.3 Injection Assembly

An injection assembly shall be provided at each chemical injection point along the condenser water piping as indicated. The injection assemblies shall be constructed of stainless steel. The discharge of the assemblies shall extend to the centerline of the condenser water piping. Each assembly shall include a shutoff valve and check valve at the point of

entrance into the condenser water line.

2.8.5.4 Water Meter

Water meters shall be provided with an electric contacting register and remote accumulative counter. The meter shall be installed within the make-up water line, as indicated.

2.8.5.5 Timers

Timers shall be of the automatic reset, adjustable type, and electrically operated. The timers shall be suitable for a 120 volt current. The timers shall be located within the water treatment control panel.

2.8.5.6 Water Treatment Control Panel

The control panel shall be a NEMA 12 enclosure suitable for surface mounting. The panel shall be constructed of stainless steel with a hinged door and lock. The panel shall contain a laminated plastic nameplate identifying each of the following functions:

(1) Main power switch and indicating light
(2) MAN-OFF-AUTO selector switch
(3) Indicating lamp for bleed-off valve
(4) Indicating lamp for each chemical feed pump
(5) Set point reading for each timer

2.8.5.7 Chemical Piping

The piping and fittings shall be constructed of schedule 80 PVC or stainless steel suitable for the water treatment chemicals.

2.8.5.8 Sequence of Operation

The chemicals shall be added based upon sensing the make-up water flow rate and activating appropriate timers. A separate timer shall be provided for each chemical. The blow down shall be controlled based upon the make-up water flow rate and a separate timer. The injection of the chemical required for biological control shall be controlled by a timer which can be manually set for proper chemical feed. All timer set points, blow down rates, and chemical pump flow rates shall be determined and set by the water treatment company.

2.8.5.9 Test Kits

One test kit of each type required to determine the water quality as outlined within the operation and maintenance manuals shall be provided.

2.9 PIPING COMPONENTS

2.9.1 Water Piping and Fittings

2.9.1.1 Steel Pipe

Steel pipe shall conform to ASTM A 53, Schedule 40, Type E or S, Grades A or B. Type F pipe shall not be used.

2.9.1.2 Steel Pipe Joints and Fittings

Joints and fittings shall be welded, flanged, threaded, or grooved as indicated. If not otherwise indicated, piping 25 mm (1 inch) and smaller shall be threaded; piping larger than 25 mm (1 inch) and smaller than 80 mm (3 inches) shall be either threaded, grooved, or welded; and piping 80 mm (3 inches) and larger shall be grooved, welded, or flanged. Rigid grooved mechanical joints and fittings may only be used in serviceable aboveground locations where the temperature of the circulating medium does not exceed 110 degrees C. Flexible grooved joints shall be used only as a flexible connector with grooved pipe system. Unless otherwise specified, grooved piping components shall meet the corresponding criteria specified for the similar welded, flanged, or threaded component specified herein. The manufacturer of each fitting shall be permanently identified on the body of the fitting in accordance with MSS SP-25.

a. Welded Joints and Fittings: Welded fittings shall conform to ASTM A 234/A 234M, and identified with the appropriate grade and marking symbol. Butt-welding fittings shall conform to ASME B16.9. Socket-welding and threaded fittings shall conform to ASME B16.11.

b. Flanged Joints and Fittings: Flanges shall conform to ASTM A 181/A181M and ASME B16.5 Class 150. Gaskets shall be nonasbestos compressed material in accordance with ASME B16.21, 1.59 mm (1/16 inch) thickness, full face or self-centering flat ring type. This gaskets shall contain aramid fibers bonded with styrene butadeine rubber (SBR) or nitrile butadeine rubber (NBR). Bolts, nuts, and bolt patterns shall conform to ASME B16.5. Bolts shall be high or intermediate strength material conforming to ASTM A 193/A 193M.

c. Threaded Joints and Fittings: Threads shall conform to ASME B1.20.1. Pipe nipples shall conform to ASTM A 733, type and material to match adjacent piping. Unions shall conform to ASME B16.39, type as required to match adjacent piping.

d. Dielectric Unions and Flanges: Dielectric unions shall have the tensile strength and dimensional requirements specified. Unions shall have metal connections on both ends threaded to match adjacent piping. Metal parts of dielectric unions shall be separated with a nylon insulator to prevent current flow between dissimilar metals. Unions shall be suitable for the required operating pressures and temperatures. Dielectric flanges shall provide the same pressure ratings as standard flanges and provide complete electrical isolation.

e. Grooved Mechanical Joints and Fittings: Joints and fittings shall be designed for not less than 862 kPa (125 psig) service and shall be the product of the same manufacturer. Fitting and coupling houses shall be malleable iron conforming to ASTM A 47,ASTM A 47M, Grade 32510; ductile iron conforming to ASTM A 536, Grade 65-45-12; or steel conforming ASTM A 106, Grade B or ASTM A 53. Gaskets shall be molded synthetic rubber with central cavity, pressure responsive configuration and shall conform to ASTM D 2000 Grade No. 2CA615A15B44F17Z for circulating medium up to 110 degrees C (230 degrees F) or Grade No. M3BA610A15B44Z for circulating medium up to 93 degrees C (200 degrees F). Grooved joints shall conform to AWWA C606. Coupling nuts and bolts shall be steel and shall conform to ASTM A 183.

2.9.1.3 Copper Tube

Copper tubing for water service shall conform to ASTM B 88,ASTM B 88M, Type K or L.

2.9.1.4 Copper Tube Joints and Fittings

Wrought copper and bronze solder-joint pressure fittings shall conform to ASME B16.22 and ASTM B 75M. Cast copper alloy solder-joint pressure fittings shall conform to ASME B16.18. Cast copper alloy fittings for flared copper tube shall conform to ASME B16.26 and ASTM B 62. Brass or bronze adapters for brazed tubing may be used for connecting tubing to flanges and to threaded ends of valves and equipment. Extracted brazed tee joints produced with an acceptable tool and installed as recommended by the manufacturer may be used.

2.9.2 Water Piping Valves and Accessories

Valves shall be rated for Class 125 and shall be suitable for operating temperature of 120 degrees C (250 degrees F). Valves shall be suitable for the working pressure of the pipe in which installed. Valves shall meet the material, fabrication and operating requirements of ASME B31.1. Chain operators shall be provided for valves located 3 m or higher above the floor. Valves in sizes larger than 25 mm (1 inch) and used on steel pipe systems, may be provided with rigid grooved mechanical joint ends. Such grooved end valves shall be subject to the same requirements as rigid grooved mechanical joints and fittings and, shall be provided by the same manufacturer as the grooved pipe joint and fitting system.

2.9.2.1 Gate Valves

Gate valves 65 mm (2-1/2 inches) and smaller shall conform to MSS SP-80 and shall be bronze with rising stem and threaded, soldered, or flanged ends. Gate valves 80 mm (3 inches) and larger shall conform to MSS SP-70, Type I, II, Class 125, Design OF and shall be cast iron with bronze trim, outside screw and yoke, and flanged or threaded ends.

2.9.2.2 Globe and Angle Valves

Globe and angle valves 65 mm (2-1/2 inches) and smaller shall conform to MSS SP-80 and shall be bronze with threaded, soldered, or flanged ends. Globe and angle valves 80 mm (3 inches) and larger shall conform to MSS SP-85 and shall be cast iron with bronze trim and flanged or threaded ends.

2.9.2.3 Check Valves

Check valves 65 mm (2-1/2 inches) and smaller shall conform to MSS SP-80 and shall be bronze with threaded, soldered, or flanged ends. Check valves 80 mm (3 inches) and larger shall conform to MSS SP-71, Type I, II, III, or IV, Class 125 or 150 and shall be cast iron with bronze trim and flanged or threaded ends.

2.9.2.4 Butterfly Valves

Butterfly valves shall be in accordance with MSS SP-67, Type 1 and shall be 2 flange or lug wafer type, and shall be bubble tight at 1,000 kPa (150 psig). Valve bodies shall be cast iron, malleable iron, or steel. Valves smaller than 200 mm (8 inches) shall have throttling handles with a minimum of seven locking positions. Valves 200 mm (8 inches) and larger shall have totally enclosed manual gear operators with adjustable balance return stops

and position indicators. Valves in insulated lines shall have extended neck to accommodate insulation thickness.

2.9.2.5 Plug Valves

Plug valves 50 mm (2 inches) and larger shall conform to MSS SP-78, have flanged or threaded ends, and have cast iron bodies with bronze trim. Valves 50 mm (2 inches) and smaller shall be bronze with NPT connections for black steel pipe and brazed connections for copper tubing. Valves shall be lubricated, non-lubricated, or tetrafluoroethylene resin-coated type. Valves shall be resilient, double seated, trunnion mounted with tapered lift plug capable of 2-way shutoff. Valves shall operate from fully open to fully closed by rotation of the handwheel to lift and turn the plug. Valves shall a weatherproof operators with mechanical position indicators. Valves 200 mm (8 inches) or larger shall be provided with manual gear operators with position indicators.

2.9.2.6 Ball Valves

Ball valves 15 mm (1/2 inch) and larger shall conform to MSS SP-72 or MSS SP-110 and shall be ductile iron or bronze with threaded, soldered, or flanged ends. Valves 200 mm (8 inches) or larger shall be provided with manual gear operators with position indicators.

2.9.2.7 Balancing Valves

Manual Balancing Valves. Balancing valves 50 mm (2 inches) or smaller shall be bronze with NPT connections for black steel pipe and brazed connections for copper tubing. Valves 25 mm (1 inch) or larger may be all iron with threaded or flanged ends. The valves shall have a square head or similar device and an indicator arc and shall be designed for 120 degrees C. Iron valves shall be lubricated, nonlubricated, or tetrafluoroethylene resin-coated plug valves. In lieu of plug valves, ball valves may be used. Plug valves and ball valves 200 mm (8 inches) larger shall be provided with manual gear operators with position indicators.

Calibrated Balancing Valves. Calibrated balancing valves shall have meter connections with positive shutoff valves. An integral pointer shall register the degree of valve opening. Valves shall be calibrated so that flow rate can be determined when valve opening in degrees and pressure differential across valve is known. Each balancing valve shall be constructed with internal seals to prevent leakage and shall be supplied with preformed insulation. Valves shall be suitable for 120 degrees C temperature and working pressure of the pipe in which installed. Valve bodies shall be provided with tapped openings and pipe extensions with shutoff valves outside of pipe insulation. The pipe extensions shall be provided with quick connecting hose fittings for a portable meter to measure the pressure differential. In lieu of the balancing valve with integral metering connections, a ball valve or plug valve with a separately installed orifice plate or venturi tube may be used for balancing.

Automatic Flow Control Valves. In lieu of balancing valves specified, automatic flow control valves may be provided to maintain constant flow, and shall be designed to be sensitive to pressure differential across the valve to provide the required opening. Valves shall be selected for the flow required and provided with a permanent nameplate or tag carrying a permanent record of the factory-determined flow rate and flow control pressure levels. Valves shall control the flow within 5 percent of the tag rating. Valves shall be suitable for the maximum operating pressure of 862

kPa (125 psig) or 150 percent of the system operating pressure, whichever is the greater. Where the available system pressure is not adequate to provide the minimum pressure differential that still allows flow control, the system pump head capability shall be appropriately increased. Where flow readings are provided by remote or portable meters, valve bodies shall be provided with tapped openings and pipe extensions with shutoff valves outside of pipe insulation. The pipe extensions shall be provided with quick connecting hose fittings for a portable meter to measure the pressure differential across the automatic flow control valve. Automatic flow control valve specified may be substituted for orifice plate or venturi tube flow measuring devices.

Portable Differential Meters. One portable differential meter shall be furnished if calibrated balancing valve or automatic flow control valve is required. The meter suitable for the operating pressure specified shall be complete with hoses, vent, shutoff valves, and carrying case as recommended by the valves manufacturer

2.9.2.8 Air Vents

Manual air vents shall be brass or bronze valves or cocks suitable for 862 kpa (125 psig) service, and furnished with threaded plugs or caps. Automatic air vents shall be float type, cast iron, stainless steel, or forged steel construction, suitable for 862 kpa (125 psig) service.

Automatic air vents shall be 20 mm quick-venting float and vacuum air valves. Each air vent valve shall have a large port permitting the expulsion of the air without developing excessive back pressure, a noncollapsible metal float which will close the valve and prevent the loss of water from the system, an air seal that will effectively close and prevent the re-entry of air into the system when subatmospheric pressures prevail therein, and a thermostatic member that will close the port against the passage of steam from the system. The name of the manufacturer shall be clearly stamped on the outside of each valve. The air vent valve shall be suitable for the pressure rating of the piping system.

2.9.2.9 Strainers

Strainers shall be in accordance with ASTM F 1199, except as modified herein. Strainer shall be the cleanable, basket or "Y" type, the same size as the pipeline. The strainer bodies shall be fabricated of cast iron with bottoms drilled, and tapped. The bodies shall have arrows clearly cast on the sides indicating the direction of flow. Each strainer shall be equipped with removable cover and sediment screen. The screen shall be made of minimum 0.8 mm (22 gauge) monel or corrosion-resistant steel, with small perforations numbering not less than 60 per square centimeter (400 per square inch) to provide a net free area through the basket of at least 3.30 times that of the entering pipe. The flow shall be into the screen and out through the perforations.

2.9.2.10 Combination Strainer and Suction Diffuser

A combination strainer and suction diffuser, consisting of an angle type body with removable strainer basket and straightening vanes, a suction pipe support, and a blowdown outlet, shall be provided on pump suction. The combination strainer and suction diffuser shall be in accordance with ASTM F 1199, except as modified herein.

2.9.2.11 Filter/Strainer Vessel

Filter/strainer vessels shall be constructed of 304/316 stainless steel with 304 ss wire mesh lined basket strainer for 50 micron application with filter bag. Vessels shall be designed for side inlet and bottom outlet connection. Vessels shall be equipped with swing bolt closure and differential pressure gauge taps equipped with pressure gauge. Seal material provided shall be suitable for the chilled water system water treatment chemical (Vessels will be used as water treatment chemical feeder as specified herein). Vessels shall be U.F. Strainrite, Model CQX 180 or approved equal.

2.9.2.12 Pump Discharge Valves

Pump discharge valves shall be installed where indicated and shall perform the functions of a nonslam check valve, a manual balancing valve, and a shutoff. Valves shall be of cast iron or ductile iron construction with bronze and/or stainless steel accessories. Valves shall have an integral pointer which registers the degree of valve opening. Flow through the valve shall be manually adjustable from bubble tight shutoff to full flow. Valves smaller than 50 mm (2 inches) shall have NPT connections. Valves 50 mm (2 inches) and larger shall have flanged or grooved end connections. The valve design shall allow the back seat for the stem to be replaced in the field under full line pressure.

2.9.2.13 Flexible Pipe Connectors

Flexible pipe connectors shall be designed for 862 kpa (125 psig) or 1034 kPa (150 psig) service as appropriate for the static head plus the system head, and 110 degrees C (230 degrees F), for grooved end flexible connectors. The flexible section shall be constructed of rubber, tetrafluoroethylene resin, or corrosion-resisting steel, bronze, monel, or galvanized steel. The flexible section shall be suitable for intended service with end connections to match adjacent piping. Flanged assemblies shall be equipped with limit bolts to restrict maximum travel to the manufacturer's standard limits. Unless otherwise indicated, the length of the flexible connectors shall be as recommended by the manufacturer for the service intended. Internal sleeves or liners, compatible with circulating medium, shall be provided when recommended by the manufacturer. Covers to protect the bellows shall be provided where indicated.

2.9.2.14 Pressure Gauges

Gauges shall conform to ASME B40.1 and shall be provided with throttling type needle valve or a pulsation dampener and shut-off valve. Gauge shall be a minimum of 85 mm in diameter with a range from 0 kPa (0 psig) to approximately 1.5 times the maximum system working pressure.

2.9.2.15 Thermometers

Thermometers shall have brass, malleable iron, or aluminum alloy case and frame, clear protective face, permanently stabilized glass tube with indicating-fluid column, white face, black numbers, and a 225 mm (9 inch) scale. Thermometers shall have rigid stems with straight, angular, or inclined pattern.

2.9.2.16 Pipe Nipples

Pipe nipples shall be in accordance with ASTM A 733 and be of material to match adjacent piping.

2.9.2.17 Pipe Unions

Pipe unions shall be in accordance with ASME B16.39 and be of material to match adjacent piping.

2.9.2.18 Solder

Solder for water piping shall be in accordance with ASTM B 32, alloy grade 50B. Solder flux shall be liquid or paste form, non-corrosive and conform to ASTM B 813.

2.9.3 Pipe Hangers, Inserts, and Supports

Pipe hangers, inserts, and supports shall conform to MSS SP-58 and MSS SP-69.

2.9.4 Underground Chilled Water Piping

Underground chilled water piping shall be provided as specified in accordance with Section 02555 PREFABRICATED UNDERGROUND HEATING/COOLING DISTRIBUTION SYSTEM

2.10 SIDE STREAM FILTERS

Side stream filters deesigned for cooling system/tower filtration system shall be skid mounted, package type unit complete with water circulatinbg pump, backwash flow control, air release valves, and automatic filter control valves. Filter shall have a high performance of 0.5 micron filtration based on centrifugal separation above the filtering medium of sands located within a single vessel. filter tank shall be constructed of stainless steel.

2.11 FABRICATION

2.11.1 Factory Coating

Unless otherwise specified, equipment and component items, when fabricated from ferrous metal, shall be factory finished with the manufacturer's standard finish, except that items located outside of buildings shall have weather resistant finishes that will withstand 500 hours exposure to the salt spray test specified in ASTM B 117 using a 5 percent sodium chloride solution. Immediately after completion of the test, the specimen shall show no signs of blistering, wrinkling, cracking, or loss of adhesion and no sign of rust creepage beyond 3 mm on either side of the scratch mark. Cut edges of galvanized surfaces where hot-dip galvanized sheet steel is used shall be coated with a zinc-rich coating conforming to ASTM D 520, Type I.

2.11.2 Field Painting

Painting required for surfaces not otherwise specified, and finish painting of items only primed at the factory are specified in Section 09900 PAINTING, GENERAL.

2.11.2.1 Color Coding

Color coding for piping identification is specified in Section 09900 PAINTING, GENERAL.

2.12 FACTORY TESTS

2.12.1 Chiller Performance Test

The Contractor and proposed chiller manufacturer shall be responsible for performing the chiller factory test to validate the specified full load capacity, full load EER, and IPLV in accordance with ARI 550 except as indicated. The chiller factory test shall be performed in the presence of a Government representative. The Contractor and chiller manufacturer shall provide to the Government a certified chiller factory test report in accordance with ARI 550 to confirm that the chiller performs as specified. All tests shall be conducted in an ARI certified test facility in conformance with ARI 550 procedures and tolerances, except as indicated. At a minimum, chiller capacity shall be validated to meet the scheduled requirements indicated on the drawings. Tolerance or deviation shall be in strict accordance with ARI 550. Stable operation at minimum load of 10 percent of total capacity shall be demonstrated during the factory test.

a. Temperature adjustments shall adhere to ARI 550 to adjust from the design fouling factor to the clean tube condition. Test temperature adjustments shall be verified prior to testing by the manufacturer. There shall be no exceptions to conducting the test with clean tubes with the temperature adjustments per section A7.3 of ARI 550. The manufacturer shall clean the tubes, if necessary, prior to testing to obtain a test fouling factor of 0.0000.

b. The factory test instrumentation shall be per ARI 550 and the calibration shall be traceable to the National Institute of Standards and Technology.

c. A certified test report of all data shall be forwarded to the Government for approval prior to project acceptance. All calibration curves and information sheets for all instrumentation shall be provided.

d. If the equipment fails to perform within allowable tolerances, the manufacturer shall be allowed to make necessary revisions to his equipment and retest as required. The manufacturer shall assume all expenses incurred by the Government to witness the retest.

2.13 SUPPLEMENTAL COMPONENTS

2.13.1 Drain and Makeup Water Piping

Piping and backflow preventers shall comply with the requirements of Section 15400 PLUMBING, GENERAL PURPOSE. Drains which connect to sanitary sewer system shall be connected by means of an indirect waste.

PART 3 EXECUTION

3.1 INSTALLATION

All work shall be performed in accordance with the manufacturer's published diagrams, recommendations, and equipment warranty requirements. Where equipment is specified to conform to the requirements of ASME BPV VIII Div 1 and ASME BPV IX, the design, fabrication, and installation of the system shall conform to ASME BPV VIII Div 1 and ASME BPV IX.

3.1.1 Refrigeration System

3.1.1.1 Equipment

Necessary supports shall be provided for all equipment, appurtenances, and pipe as required, including frames or supports for compressors, pumps, cooling towers, condensers, liquid coolers, and similar items. Compressors shall be isolated from the building structure. If mechanical vibration isolators are not provided, vibration absorbing foundations shall be provided. Each foundation shall include isolation units consisting of machine and floor or foundation fastenings, together with intermediate isolation material. Other floor-mounted equipment shall be set on not less than a 150 mm concrete pad doweled in place. Concrete foundations for floor mounted pumps shall have a mass equivalent to three times the weight of the components, pump, base plate, and motor to be supported. In lieu of concrete pad foundation, concrete pedestal block with isolators placed between the pedestal block and the floor may be provided. Concrete pedestal block shall be of mass not less than three times the combined pump, motor, and base weights. Isolators shall be selected and sized based on load-bearing requirements and the lowest frequency of vibration to be isolated. Lines connected to pumps mounted on pedestal blocks shall be provided with flexible connectors. Foundation drawings, bolt-setting information, and foundation bolts shall be furnished prior to concrete foundation construction for all equipment indicated or required to have concrete foundations. Concrete for foundations and concrete-structured or cased-cooling towers shall be as specified in Section 03300 CAST-IN-PLACE STRUCTURAL CONCRETE. Equipment shall be properly leveled, aligned, and secured in place in accordance with manufacturer's instructions.

3.1.1.2 Refrigerant Charging

a. Initial Charge: Upon completion of all the refrigerant pipe tests, the vacuum on the system shall be broken by adding the required charge of dry refrigerant for which the system is designed, in accordance with the manufacturer's recommendations. Contractor shall provide the complete charge of refrigerant in accordance with manufacturer's recommendations. Upon satisfactory completion of the system performance tests, any refrigerant that has been lost from the system shall be replaced. After the system is fully operational, service valve seal caps and blanks over gauge points shall be installed and tightened.

b. Refrigerant Leakage: If a refrigerant leak is discovered after the system has been charged, the leaking portion of the system shall immediately be isolated from the remainder of the system and the refrigerant shall be pumped into the system receiver or other suitable container. The refrigerant shall not be discharged into the atmosphere.

c. Contractor's Responsibility: The Contractor shall, at all times during the installation and testing of the refrigeration system, take steps to prevent the release of refrigerants into the atmosphere. The steps shall include, but not be limited to, procedures which will minimize the release of refrigerants to the atmosphere and the use of refrigerant recovery devices to remove refrigerant from the system and store the refrigerant for reuse or reclaim. At no time shall more than 85 g of refrigerant be released to the atmosphere in any one occurrence. Any system leaks within the first year shall be repaired in accordance with

the specified requirements including material, labor, and refrigerant if the leak is the result of defective equipment, material, or installation.

3.1.1.3 Oil Charging

Except for factory sealed units, two complete charges of lubricating oil for each compressor crankcase shall be furnished. One charge shall be used during the performance testing period, and upon the satisfactory completion of the tests, the oil shall be drained and replaced with the second charge.

3.1.1.4 Automatic Controls

Automatic controls for the central refrigeration system specified in paragraph REFRIGERATION SYSTEM shall be provided with the central refrigeration equipment. These controls shall operate automatically to balance the equipment capacity with the load on the air conditioning system, and shall be fully coordinated with and integrated into the temperature control system specified in Section 15895 AIR SUPPLY, DISTRIBUTION, VENTILATION, AND EXHAUST SYSTEM and 15951 DIRECT DIGITAL CONTROL FOR HVAC.

3.1.2 General Piping Installation

3.1.2.1 Brazed Joints

Before brazing copper joints, both the outside of the tube and the inside of the fitting shall be cleaned with a wire fitting brush until the entire joint surface is bright and clean. Brazing flux shall not be used. Surplus brazing material shall be removed at all joints. Steel tubing joints shall be made in accordance with the manufacturer's recommendations. Joints in steel tubing shall be painted with the same material as the baked-on coating within 8 hours after joints are made. Tubing shall be protected against oxidation during brazing by continuous purging of the inside of the piping using nitrogen. All piping shall be supported prior to brazing and shall not be sprung or forced.

3.1.2.2 Threaded Joints

Threaded joints shall be made with tapered threads and made tight with PTFE tape complying with ASTM D 3308 or equivalent thread-joint compound applied to the male threads only. Not more than three threads shall show after the joint is made.

3.1.2.3 Welded Joints

Welding shall be in accordance with qualified procedures using qualified welders and welding operators. Procedures and welders shall be qualified in accordance with ASME BPV IX. Welding procedures qualified by others, and welders and welding operators qualified by another employer may be accepted as permitted by ASME B31.1. Contracting Officer shall be notified 24 hours in advance of welding tests and the tests shall be performed at the work site if practical. A permanent mark shall be applied near each weld to identify the welder who made that weld. Welded joints in steel refrigerant piping shall be fusion-welded. Changes in direction of piping shall be made with welded fittings only; mitering or notching pipe or other similar construction to form elbows or tees will not be permitted. Branch connections shall be made with welding tees or forged welding branch outlets. Steel pipe shall be thoroughly cleaned of all scale and foreign

matter before the piping is assembled. During welding the pipe and fittings shall be filled with an inert gas, such as nitrogen, to prevent the formation of scale. Beveling, alignment, heat treatment, and inspection of weld shall conform to ASME B31.1. Weld defects shall be removed and rewelded at no additional cost to the Government. Electrodes shall be stored and dried in accordance with AWS D1.1 or as recommended by the manufacturer. Electrodes that have been wetted or that have lost any of their coating shall not be used.

3.1.2.4 Flanged Joints

Flanged joints shall be faced true, provided with gaskets suitable for use with refrigerants and made square and tight. When steel refrigerant piping is used, union or flange joints shall be provided in each line immediately preceding the connection to each piece of equipment requiring maintenance, such as compressors, coils, chillers, control valves, and other similar items.

3.1.2.5 Flared Connections

When flared connections are used, a suitable lubricant shall be used between the back of the flare and the nut in order to avoid tearing the flare while tightening the nut.

3.1.2.6 Thermometers

Thermometers shall be located specifically on, but not limited to the following: condenser water lines entering and leaving the condenser, the sensing element of each automatic temperature control device where a thermometer is not an integral part thereof, the liquid line leaving receiver and the suction line at each evaporator or liquid cooler.

3.1.2.7 Supports

a. General: Hangers used to support piping 50 mm (2 inches) and larger shall be fabricated to permit adequate adjustment after erection while still supporting the load. Pipe guides and anchors shall be installed to keep pipes in accurate alignment, to direct the expansion movement, and to prevent buckling, swaying, and undue strain. Piping subjected to vertical movement, when operating temperatures exceed ambient temperatures, shall be supported by variable spring hangers and supports or by constant support hangers.

b. Structural Attachments: Structural steel brackets required to support piping, headers, and equipment, but not shown, shall be provided under this section. Material and installation shall be as specified under Section 05120 STRUCTURAL STEEL.

3.1.2.8 Pipe Hangers, Inserts, and Supports

Pipe hangers, inserts, and supports shall conform to MSS SP-58 and MSS SP-69, except as modified herein. Pipe hanger types 5, 12, and 26 shall not be used.

a. Hangers: Type 3 shall not be used on insulated piping.

b. Inserts: Type 18 inserts shall be secured to concrete forms before concrete is placed. Continuous inserts which allow more

adjustments may be used if they otherwise meet the requirements for Type 18 inserts.

c. C-Clamps: Type 19 and 23 C-clamps shall be torqued per MSS SP-69 and have both locknuts and retaining devices, furnished by the manufacturer. Field-fabricated C-clamp bodies or retaining devices are not acceptable.

d. Angle Attachments: Type 20 attachments used on angles and channels shall be furnished with an added malleable-iron heel plate or adapter.

e. Hangers: Type 24 may be used only on trapeze hanger systems or on fabricated frames.

f. Saddles and Shields: Where Type 39 saddle or Type 40 shield are permitted for a particular pipe attachment application, the Type 39 saddle, connected to the pipe, shall be used on all pipe 100 mm (4 inches) and larger when the temperature of the medium is 16 degrees C or higher. Type 40 shields shall be used on all piping less than 100 mm (4 inches) and all piping 100 mm (4 inches) and larger carrying medium less than 16 degrees C. A high density insulation insert of cellular glass shall be used under the Type 40 shield for piping 50 mm (2 inches) and larger.

g. Horizontal Pipe Supports: Horizontal pipe supports shall be spaced as specified in MSS SP-69 and a support shall be installed not over 300 mm from the pipe fitting joint at each change in direction of the piping. Pipe supports shall be spaced not over 1.5 m apart at valves. Pipe hanger loads suspended from steel joist with hanger loads between panel points in excess of 22 kg shall have the excess hanger loads suspended from panel points.

h. Vertical Pipe Supports: Vertical pipe shall be supported at each floor, except at slab-on-grade, and at intervals of not more than 4.5 m, not more than 2.4 m from end of risers, and at vent terminations.

i. Pipe Guides: Type 35 guides using, steel, reinforced polytetrafluoroethylene (PTFE) or graphite slides shall be provided where required to allow longitudinal pipe movement. Lateral restraints shall be provided as required. Slide materials shall be suitable for the system operating temperatures, atmospheric conditions, and bearing loads encountered.

j. Steel Slides: Where steel slides do not require provisions for restraint of lateral movement, an alternate guide method may be used. On piping 100 mm (4 inches) and larger, a Type 39 saddle shall be used. On piping under 100 mm (4 inches), a Type 40 protection shield may be attached to the pipe or insulation and freely rest on a steel slide plate.

k. High Temperature Guides with Cradles: Where there are high system temperatures and welding to piping is not desirable, then the Type 35 guide shall include a pipe cradle, welded to the guide structure and strapped securely to the pipe. The pipe shall be separated from the slide material by at least 100 mm, or by an amount adequate for the insulation, whichever is greater.

l. Multiple Pipe Runs: In the support of multiple pipe runs on a common base member, a clip or clamp shall be used where each pipe crosses the base support member. Spacing of the base support members shall not exceed the hanger and support spacing required for an individual pipe in the multiple pipe run.

3.1.2.9 Pipe Sleeves

Sleeves shall not be installed in structural members except where indicated or approved. Rectangular and square openings shall be as detailed. Each sleeve shall extend through its respective wall, floor, or roof, and shall be cut flush with each surface. Pipes passing through concrete or masonry wall or concrete floors or roofs shall be provided with pipe sleeves fitted into place at the time of construction. Unless otherwise indicated, sleeves shall be of such size as to provide a minimum of 6 mm all-around clearance between bare pipe and sleeves or between jacketed-insulation and sleeves. Sleeves in bearing walls, waterproofing membrane floors, and wet areas shall be steel pipe or cast iron pipe. Sleeves in non-bearing walls, floors, or ceilings may be steel pipe, cast iron pipe, galvanized sheet metal with lock-type longitudinal seam and of the metal thickness indicated, or moisture resistant fiber or plastic. Except in pipe chases or interior walls, the annular space between pipe and sleeve or between jacket over-insulation and sleeve shall be sealed as indicated and specified in Section 07900 JOINT SEALING. Pipes passing through wall waterproofing membrane shall be sleeved as specified above, and a waterproofing clamping flange shall be installed.

a. Roof and Floor Penetrations: Pipes passing through roof or floor waterproofing membrane shall be installed through a 5.17 kg/sq. m. (17 ounce) copper sleeve, or a 0.81 mm (0.032 inch) thick aluminum sleeve, each within an integral skirt or flange. Flashing sleeve shall be suitably formed, and skirt or flange shall extend not less than 200 mm from the pipe and shall be set over the roof or floor membrane in a troweled coating of bituminous cement. The flashing sleeve shall extend up the pipe a minimum of 50 mm above highest floor level of the roof or a minimum of 250 mm above the roof, whichever is greater, or 250 mm above the floor. The annular space between the flashing sleeve and the bare pipe or between the flashing sleeve and the metal-jacket-covered insulation shall be sealed as indicated. Pipes up to and including 250 mm (10 inches) in diameter passing through roof or floor waterproofing membrane may be installed through a cast iron sleeve with caulking recess, anchor lugs, flashing clamp device, and pressure ring with brass bolts. Waterproofing membrane shall be clamped into place and sealant shall be placed in the caulking recess. In lieu of a waterproofing clamping flange and caulking and sealing of annular space between pipe and sleeve or conduit and sleeve, a modular mechanical type sealing assembly may be installed. Seals shall consist of interlocking synthetic rubber links shaped to continuously fill the annular space between the pipe/conduit and sleeve with corrosion protected carbon steel bolts, nuts, and pressure plates. Links shall be loosely assembled with bolts to form a continuous rubber belt around the pipe with a pressure plate under each bolt head and each nut. After the seal assembly is properly positioned in the sleeve, tightening of the bolt shall cause the rubber sealing elements to expand and provide a watertight seal between the pipe/conduit seal between the pipe/conduit and the sleeve. Each seal assembly shall be sized as recommended by the manufacturer to fit the

pipe/conduit and sleeve involved. The Contractor electing to use the modular mechanical type seals shall provide sleeves of the proper diameters.

b. Fire-Rated Walls and Partitions: Penetration of fire-rated walls and partitions shall be sealed as specified in Section 07840 FIRESTOPPING.

3.1.2.10 Escutcheons

Finished surfaces where exposed piping, bare or insulated, pass through floors, walls, or ceilings, except in boiler, utility, or equipment rooms, shall be provided with escutcheons. Where sleeves project slightly from floors, special deep-type escutcheons shall be used. Escutcheon shall be secured to pipe or pipe covering.

3.1.2.11 Access Panels

Access panels shall be provided for all concealed valves, vents, controls, and items requiring inspection or maintenance. Access panels shall be of sufficient size and located so that the concealed items may be serviced and maintained or completely removed and replaced. Access panels shall be as specified in Section 05500 MISCELLANEOUS METALS.

3.1.3 Water Piping

Pipe and fitting installation shall conform to the requirements of ASME B31.1. Pipe shall be cut accurately to measurements established at the jobsite, and worked into place without springing or forcing, completely clearing all windows, doors, and other openings. Cutting or other weakening of the building structure to facilitate piping installation will not be permitted without written approval. Pipe or tubing shall be cut square, shall have burrs removed by reaming, and shall permit free expansion and contraction without causing damage to the building structure, pipe, joints, or hangers.

3.1.3.1 Directional Changes

Changes in direction shall be made with fittings, except that bending of pipe 100 mm (4 inches) and smaller will be permitted, provided a pipe bender is used and wide weep bends are formed. The centerline radius of bends shall not be less than 6 diameters of the pipe. Bent pipe showing kinks, wrinkles, flattening, or other malformations will not be accepted.

3.1.3.2 Functional Requirements

Horizontal supply mains shall pitch down in the direction of flow as indicated. The grade shall not be less than 2 mm in 1 m. Reducing fittings shall be used for changes in pipe sizes. Open ends of pipelines and equipment shall be capped or plugged during installation to keep dirt or other foreign materials out of the system. Pipe not otherwise specified shall be uncoated. Connections to appliances shall be made with malleable iron unions for steel pipe 65 mm (2-1/2 inches) or less in diameter, and with flanges for pipe 80 mm (3 inches) and above in diameter. Connections between ferrous and copper piping shall be electrically isolated from each other with dielectric unions or flanges. All piping located in air plenums shall conform to NFPA 90A requirements. Pipe and fittings installed in inaccessible conduits or trenches under concrete floor slabs shall be welded.

3.1.3.3 Valves

Isolation gate or ball valves shall be installed on each side of each piece of equipment, at the midpoint of all looped mains, and at any other points indicated or required for draining, isolating, or sectionalizing purpose. Isolation valves may be omitted where balancing cocks are installed to provide both balancing and isolation functions. Each valve except check valves shall be identified. Valves in horizontal lines shall be installed with stems horizontal or above.

3.1.3.4 Air Vents

Air vents shall be provided at all high points, on all water coils, and where indicated to ensure adequate venting of the piping system.

3.1.3.5 Drains

Drains shall be provided at all low points and where indicated to ensure complete drainage of the piping. Drains shall be accessible, and shall consist of nipples and caps or plugged tees unless otherwise indicated.

3.1.3.6 Flexible Pipe Connectors

Preinsulated flexible pipe connectors shall be attached to other components in strict accordance with the latest printed instructions of the manufacturer to ensure a vapor tight joint. Hangers, when required to suspend the connectors, shall be of the type recommended by the flexible pipe connector manufacturer and shall be provided at the intervals recommended.

3.1.3.7 Flanges and Unions

Except where copper tubing is used, union or flanged joints shall be provided in each line immediately preceding the connection to each piece of equipment or material requiring maintenance such as coils, pumps, control valves, and other similar items.

3.1.3.8 Grooved Mechanical Joints

Grooves shall be prepared in accordance with the coupling manufacturer's instructions. Pipe and groove dimensions shall comply with the tolerances specified by the coupling manufacturer. The diameter of grooves made in the field shall be measured using a "go/no-go" gauge, vernier or dial caliper, or narrow-land micrometer. Groove width and dimension of groove from end of pipe shall be measured and recorded for each change in grooving tool setup to verify compliance with coupling manufacturer's tolerances.

3.1.4 Condensate Drain Lines

Water seals shall be provided in the condensate drain from all air handling units. The depth of each seal shall be 50 mm (2 inches) plus the number of mm, measured in water gauge, of the total static pressure rating of the unit to which the drain is connected. Water seals shall be constructed as indicated. Pipe cap or plug cleanouts shall be provided where indicated. Drains indicated to connect to the sanitary waste system shall be connected by an indirect waste fitting. Air conditioner drain lines shall be insulated as specified in Section 15080 THERMAL INSULATION FOR MECHANICAL SYSTEMS.

3.1.5 Mechanical Room Ventilation

Mechanical ventilation systems shall be in accordance with Section 15895 AIR SUPPLY, DISTRIBUTION, VENTILATION, AND EXHAUST SYSTEM.

3.1.6 Field Applied Insulation

Field applied insulation other than that specified for water boxes and headers shall be as specified in Section 15080 THERMAL INSULATION FOR MECHANICAL SYSTEMS.

3.1.7 Factory Applied Insulation

3.1.7.1 Liquid Coolers

Liquid coolers (including chilled water headers or boxes), which may have factory or field applied insulation, shall be insulated with unicellular plastic foam. Insulation shall be not less than 19 mm (3/4 inch) thick or have a maximum thermal conductivity of 1.59 W/((sq. m)(degree K) (0.28 Btu/((hr.)(sq. ft.)(degree F.))). In lieu of the above insulation, a 50 mm thickness of urethane foam may be used. Urethane foam shall be completely covered and sealed with a sheet metal jacket not lighter than 1.0 mm (20 gauge). Insulation on heads of coolers shall be constructed to provide easy removal and replacement of heads without damage to the insulation.

3.2 TESTS

3.2.1 Field Tests

Tests shall be conducted in the presence of the Contracting Officer. Water and electricity required for the tests will be furnished by the Government. Any material, equipment, instruments, and personnel required for the test shall be provided by the Contractor. The services of a qualified technician shall be provided as required to perform all tests and procedures indicated herein. Field tests shall be coordinated with Section 15990 TESTING, ADJUSTING, AND BALANCING OF HVAC SYSTEMS.

3.2.1.1 Water Pipe Testing

After cleaning, water piping shall be hydrostatically tested at a pressure equal to 150 percent of the total system operating pressure for period of time sufficient to inspect every joint in the system and in no case less than 2 hours. Leaks shall be repaired and piping retested until test is successful. No loss of pressure shall be allowed. Leaks shall be repaired by rewelding or replacing pipe or fittings. Caulking of joints will not be permitted. Concealed and insulated piping shall be tested in place before concealing.

3.2.1.2 Test of Backflow Prevention Assemblies

Backflow prevention assemblies shall be tested in accordance with Section 15400 PLUMBING, GENERAL PURPOSE.

3.2.1.3 Cooling Tower Tests

After cooling tower has been found acceptable under the visual and dimensional examination, a field performance test shall be performed in accordance with ASME PTC 23 or CTI ATC-105. The cooling tower test shall

be performed in the presence of a Government representative.

3.2.2 System Performance Tests

After the foregoing tests have been completed and before each refrigeration system is accepted, tests to demonstrate the general operating characteristics of all equipment shall be conducted by a registered professional engineer or an approved manufacturer's startup representative experienced in system startup and testing, at such times as directed. Tests shall cover a period of not less than 1 days for each system and shall demonstrate that the entire system is functioning in accordance with the drawings and specifications. Corrections and adjustments shall be made as necessary and tests shall be re-conducted to demonstrate that the entire system is functioning as specified.

3.2.3 Condenser Water Quality Tests

The condenser water shall be analyzed a minimum of once a month for a period of one year by the water treatment company. The analysis shall include the following information recorded in accordance with ASTM D 596.

Date of Sample	_____
Temperature	_____ degrees C.
Silica (SiO2)	_____ ppm (mg/1)
Insoluble	_____ ppm (mg/1)
Iron and Aluminum Oxides	_____ ppm (mg/1)
Calcium (Ca)	_____ ppm (mg/1)
Magnesium (Mg)	_____ ppm (mg/1)
Sodium and Potassium (Na and K)	_____ ppm (mg/1)
Carbonate (HCO3)	_____ ppm (mg/1)
Sulfate (SO4)	_____ ppm (mg/1)
Chloride (Cl)	_____ ppm (mg/1)
Nitrate (NO3)	_____ ppm (mg/1)
Turbidity	_____ unit
pH	_____
Residual Chlorine	_____ ppm (mg/1)
Total Alkalinity	_____ epm (meq/1)
Non-Carbonate Hardness	_____ epm (meq/1)
Total Hardness	_____ epm (meq/1)
Dissolved Solids	_____ ppm (mg/1)
Fluorine	_____ ppm (mg/1)
Conductivity	_____ micrmho/cm

3.3 INSPECTIONS

At the conclusion of the one year period, the cooling tower and condenser shall be inspected for problems due to corrosion, scale, and biological growth. If the cooling tower and condenser are found not to conform to the manufacturers recommended conditions, and the water treatment company recommendations have been followed; the water treatment company shall provide all chemicals and labor for cleaning or repairing the equipment as required by the manufacturer's recommendations.

3.4 MANUFACTURER'S FIELD SERVICE

The services of a factory-trained representative shall be provided for 1 days. The representative shall advise on the following:

a. Hermetic machines:

(1) Testing hermetic water-chilling unit under pressure for refrigerant leaks; evacuation and dehydration of machine to an absolute pressure of not over 300 microns.

(2) Charging the machine with refrigerant.

(3) Starting the machine.

b. Open Machines:

(1) Erection, alignment, testing, and dehydrating.

(2) Charging the machine with refrigerant.

(3) Starting the machine.

3.5 CLEANING AND ADJUSTING

3.5.1 Piping

Pipes shall be cleaned free of scale and thoroughly flushed of all foreign matter. A temporary bypass shall be provided for all water coils to prevent flushing water from passing through coils. Strainers and valves shall be thoroughly cleaned. Prior to testing and balancing, air shall be removed from all water systems by operating the air vents. Temporary measures, such as piping the overflow from vents to a collecting vessel shall be taken to avoid water damage during the venting process. Air vents shall be plugged or capped after the system has been vented.

3.5.2 Equipment

Equipment shall be wiped clean, with all traces of oil, dust, dirt, or paint spots removed. Temporary filters shall be provided for all fans that are operated during construction, and new filters shall be installed after all construction dirt has been removed from the building. System shall be maintained in this clean condition until final acceptance. Bearings shall be properly lubricated with oil or grease as recommended by the manufacturer. Belts shall be tightened to proper tension. Control valves and other miscellaneous equipment requiring adjustment shall be adjusted to setting indicated or directed. Fans shall be adjusted to the speed indicated by the manufacturer to meet specified conditions.

3.6 DEMONSTRATIONS

Contractor shall conduct a training course for the operating staff as designated by the Contracting Officer. The training period shall consist of a total 8 hours of normal working time and start after the system is functionally completed but prior to final acceptance tests. The field printed instructions shall cover all of the items contained in the approved operation and maintenance manuals as well as demonstrations of routine maintenance operations.

-- End of Section --